Practical Analysis of Aircraft Composites

Brian Esp

Excerpt (Sample) — Version 1.0 (October 1, 2017)

GRAND OAK PUBLISHING

Excerpt from *Practical Analysis of Aircraft Composites* Copyright © 2017 by Brian Esp

Copyright © 2017 by Brian Esp

All rights reserved. No part of this publication may be reproduced, distributed, or transmitted, in any form or by any means, or stored in a database or retrieval system, except as permitted under Sections 107 or 108 of the 1976 United States Copyright Act, without the prior written permission of the publisher.

Data and information appearing in this book are for informational purposes only. Neither the publisher nor author are liable for any injury, damage, or loss of profit resulting from use or reliance. Application of this data and information in any situation remains the professional responsibility of the practitioner. The publisher and author are not responsible for any errors or omissions and make no warranty, express or implied, with respect to the currency, completeness, or accuracy of the contents of this book.

Product and corporate names appearing herein may be trademarked and are used only for identification and explanation. All trademarks are used without permission. Use of trademarks is not authorized by, associated with or sponsored by the trademark owner(s).

Grand Oak Publishing
United States of America
ISBN: 978-0-9832453-9-1

Printed in the United States of America
10 9 8 7 6 5 4 3 2 1

Excerpt from *Practical Analysis of Aircraft Composites* Copyright © 2017 by Brian Esp

Excerpt from *Practical Analysis of Aircraft Composites* Copyright © 2017 by Brian Esp

Preface

The focus of this book is the structural analysis of composite laminates used for aircraft structures, with an emphasis on large fixed wing aircraft applications. The primary composite considered is a laminate consisting of a carbon fiber reinforcement and an epoxy matrix, but many of the presented solutions are appropriate for other material systems.

In order for the analysis methods to be demonstrated in the most effective manner, additional topics are discussed; by doing so, the *coupled* aspects of composite analysis can be addressed. These topics include:

- unique mechanical properties of composites
- testing at various levels of structural completeness
- standard design practices
- structural requirements and structural substantiation
- processing methods

Part 1 (Chapters 1–23) covers a wide variety of analysis topics. The solutions are straightforward and do not have complex mathematical expressions. This is consistent with typical engineering analysis. Also, complex mathematical expressions do not necessarily increase accuracy and may incorrectly imply that a purely analytical solution is appropriate for composites. Practical composite analysis methods (especially those related to strength prediction) are often semi-empirical and require specific test data to develop a *validated analysis method*; composites must consider notch sensitivity, impact damage, repairability, etc. Considerable effort is made to explain the reasons why practical approaches are sometimes different from academic solutions; the shortcomings of purely analytical approaches are also discussed. In contrast, academic solutions for metals tend to carry over well to practical approaches.

Mechanical properties, many of which are *unique to composites*, are also discussed in Part 1: knowledge of these properties is critical to the analysis of composite laminates that are used for aircraft structures. Also included are design considerations for composite laminates and the structures that use them. For typical structures, it is important to use standard design practices where possible because composites have many failure modes, some of which are less predictable (and less forgiving) than metals when designs are outside the typical design space.

Part 2 (Chapters 24–28) discusses the requirements and substantiation for composite aircraft structures. Fatigue loading, static strength requirements, damage tolerance, and durability are discussed from a practical perspective; these topics are harmonized with Part 1. A working knowledge of these topics is invaluable to the engineer and allows for a comprehensive understanding of the analysis of composite aerostructures.

The initial chapters of this book present the basic mechanics of laminated composites and can be used in an academic setting. However, this book is primarily intended for practicing engineers who wish to expedite the learning curve when performing practical analysis (and avoid many pitfalls along the way). Because of the vast scope of this work, it also serves as a valuable self-contained reference for engineers already familiar with composite analysis. The analysis approaches are thoroughly explained, allowing engineers to modify and develop their own methods.

Brian Esp, Ph.D.

Excerpt from *Practical Analysis of Aircraft Composites* Copyright © 2017 by Brian Esp

Excerpt from *Practical Analysis of Aircraft Composites* Copyright © 2017 by Brian Esp

Contents

Excerpt from *Practical Analysis of Aircraft Composites* Copyright © 2017 by Brian Esp

Excerpt from *Practical Analysis of Aircraft Composites* Copyright © 2017 by Brian Esp

Excerpt from *Practical Analysis of Aircraft Composites* Copyright © 2017 by Brian Esp

Excerpt from *Practical Analysis of Aircraft Composites* Copyright © 2017 by Brian Esp

Excerpt from *Practical Analysis of Aircraft Composites* Copyright © 2017 by Brian Esp

Excerpt from *Practical Analysis of Aircraft Composites* Copyright © 2017 by Brian Esp

Excerpt from *Practical Analysis of Aircraft Composites* Copyright © 2017 by Brian Esp

Excerpt from *Practical Analysis of Aircraft Composites* Copyright © 2017 by Brian Esp

Excerpt from *Practical Analysis of Aircraft Composites* Copyright © 2017 by Brian Esp

Excerpt from *Practical Analysis of Aircraft Composites* Copyright © 2017 by Brian Esp

Excerpt from *Practical Analysis of Aircraft Composites* Copyright © 2017 by Brian Esp

Excerpt from *Practical Analysis of Aircraft Composites* Copyright © 2017 by Brian Esp

Excerpt from *Practical Analysis of Aircraft Composites* Copyright © 2017 by Brian Esp

Excerpt from *Practical Analysis of Aircraft Composites* Copyright © 2017 by Brian Esp

Excerpt from *Practical Analysis of Aircraft Composites* Copyright © 2017 by Brian Esp

Excerpt from *Practical Analysis of Aircraft Composites* Copyright © 2017 by Brian Esp

Part 1

Analysis and Design

Part 1 (Chapters 1–23) focuses on the analysis and design of composite structures. The presented topics are:

- general behavior of composites
- validated analysis methods via building block testing
- analysis of composites versus metals
- analytical solutions for various problems (Chapters 3–20)
- mechanical properties
- various aspects of design
- general analysis considerations

Part 1 presents analytical solutions while Part 2 (Chapters 24–28) primarily discusses structural requirements and substantiation. Although presented in two parts, the analytical solutions from Part 1 are meant to be combined with the topics in Part 2.

Excerpt from *Practical Analysis of Aircraft Composites* Copyright © 2017 by Brian Esp

1 Introduction

The basic usage, definitions, behavior, and typical properties of composites are presented in this chapter. Because of their relatively high performance, carbon fiber/epoxy composite laminates are commonly used for large aircraft primary structures. Therefore, this material system is given priority throughout this book.

1.1 COMPOSITES

A general composite refers to multiple materials or parts that are combined in a way that allows them to effectively act as a single material or part. A sandwich structure is a composite structure that may be made entirely from metal or from composite materials (See Chapter 18). Thus, composite structures can be metal. However, for most of this book the term *composite* usually refers to a composite *material* (such as carbon fiber combined with an epoxy matrix).

1.2 COMPOSITE APPLICATIONS FOR AIRCRAFT STRUCTURES

1.2.1 Military Aircraft—Fixed Wing. Glass fiber composites were first developed in the 1930s. They were later used for radar covers (radomes) on military aircraft during WWII. In the 1960s, glass fibers were improved and subsequently used for lightly loaded secondary aircraft structures. Some examples of lightly loaded structures are fairings, spoilers, control surfaces, and radomes.

In the 1960s, boron fiber and carbon fiber composites were developed. Boron fibers were used for primary structures in the 1970s. In the 1980s, carbon fiber composites were used for primary structures on the F-117 and B-2 stealth aircrafts. Currently, carbon fiber composites are more commonly used than boron fiber composites (See Section 1.3).

Compared to metals, carbon fiber composites are associated with weight reduction, improved radar signature (stealth), and other potential benefits. Because of this, most modern U.S. military fixed wing aircraft use carbon fiber composites for external structures. Some aircraft, such as the B-2 and the

Boeing AV-8 Harrier II, have composite internal structures. The AV-8B utilizes composite spars for the wing, which have a sine wave web. The Eurofighter Typhoon has both composite external and internal structures. However, modern U.S. military aircraft use metal for many of the internal structures. This is the case for the Lockheed Martin F-22 and Lockheed Martin F-35 (See Figure 1.1). Figure 1.2 shows the general trend of composite use since 1970.

Figure 1.1 Lockheed Martin F-35. The external structure consists of carbon fiber reinforced plastic (CFRP). (Courtesy of Lockheed Martin Aeronautics Company.)

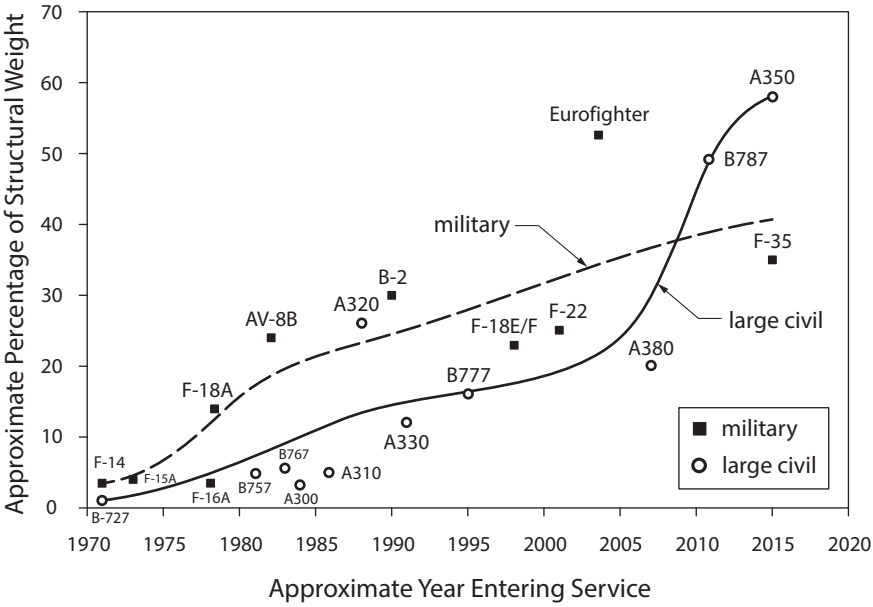

Figure 1.2 Use of composites for large fixed wing aircraft.

Excerpt from *Practical Analysis of Aircraft Composites* Copyright © 2017 by Brian Esp

Excerpt from *Practical Analysis of Aircraft Composites* Copyright © 2017 by Brian Esp

1.2.2 Large Civil Aircraft—Fixed Wing. The use of composite materials for large civil aircraft has lagged behind military aricraft usage (See Figure 1.2). This is attributed to conservatism, economic factors, lack of a need for low observable materials (stealth), and other factors. For large civil aircraft, composites were initially used for secondary structures. Some examples are fairings, spoilers, control surfaces, floor panels, and radomes (radar covers).

In the late 1980s and 1990s, composites were used for the primary structures of large civil aircraft. Two reasons for this were improvements to carbon fibers and improved toughness of epoxies. The Boeing 777, introduced in 1995, utilizes composite materials for primary structures (empennage and floor beams).

The use of composites was significantly expanded with the Boeing 787, which was introduced in 2011 (See Figure 1.3). Over 50% of the aircraft is made with composite materials, and the majority of the structural members are made from carbon fiber reinforced plastic/polymer (CFRP). The most used polymer for aircraft structures is epoxy. The Airbus A350, which entered service in 2015, continues the trend of increased usage of composites for large civil aircraft; its fuselage and wings are primarily made from carbon/epoxy.

One of the most attractive features of carbon fiber composites is their resistance to fatigue damage, especially when loaded in tension. Because of this, the long-term cost of operation may be reduced when carbon fiber composites are used (compared to metals). Also, the cabin pressure of a metal fuselage is less than ideal, which is necessary to prevent fatigue damage caused by pressurization cycles. However, because of its resistance to fatigue damage, a carbon fiber fuselage may operate at a greater pressure, which improves the comfort of passengers.

Figure 1.3 Boeing 787. The majority of the primary structures are carbon fiber reinforced plastic (CFRP). (Courtesy of Boeing Commercial Airplane Group.)

1.2.3 Small Civil Aircraft—Fixed Wing. Since about the 1980s, there has been a significant use of composites in small civil aircraft. For primary structures, small aircraft often use glass fibers (fiberglass). This is due in large part to the reduced cost of glass fiber when compared to carbon fiber. Composites are often considered for small aircraft because of the relatively low tooling cost associated with achieving an aerodynamically smooth surface.

Small aircraft may also use sandwich construction for primary structures; large aircraft tend to use solid laminates and a skin-stiffened configuration (See Chapter 27). Also, small aircraft often use bonded joints for primary structures, in contrast with medium/high load-transfer regions in large aircraft, where mechanically fastened joints are often preferred (See also Chapter 14).

1.2.4 Helicopters. Modern helicopters often use composite materials for drive shafts, flex beams, and rotor blades. Fiberglass laminates or fiberglass hybrid laminates are often used for the rotor blades since stiffness is not usually a driving factor. Helicopter airframes may also be made from composite materials.

1.3 COMPOSITE MATERIAL CONSTITUENTS

A *composite material* consists of two or more materials (constituents) when viewed at a macroscopic scale. The combination of these materials creates a *more useful material* than the constituents by themselves. A matrix (stabilizing material) surrounds the fibers (reinforcement) in a typical composite material. The fiber and matrix must be properly bonded together to function as a single material system.

Compared to the same material in bulk form, a material in fiber form exhibits superior properties. This is because there are fewer defects in fiber form when compared to bulk form.[1] As the diameter of the fiber is reduced, so does the amount/severity of detrimental imperfections. Also, small-diameter fibers can be rapidly cooled more effectively than a material in bulk form. This can improve material properties. Fibers can also be stretched along their axis during production, which can increase the fiber's strength. Furthermore, if an individual weak fiber fails in a composite material, the failure does not automatically propagate to the adjacent fiber. Rather, the matrix can transfer the load to the adjacent fibers (crack arresting feature). In turn, there is an increased resistance to flaw/crack propagation. By comparison, a material in bulk form has less resistance to flaw/crack propagation.

A typical matrix resists damage that may occur from impacts and other threats. This prevents the composite material from behaving in an excessively brittle manner. For example, glass sheets are susceptible to fracture in the presence

Excerpt from *Practical Analysis of Aircraft Composites* Copyright © 2017 by Brian Esp

of small flaws or from impact events. However, glass fiber *composites* are less susceptible to damage from impact events. The same can be said for bulk form carbon compared to carbon fiber composites. For these (and other) reasons, the *combination* of fibers and a matrix is superior to that of a bulk material (for typical fiber materials used for aircraft applications).

A fiber reinforced plastic (FRP) is a composite that consists of various possible fiber types that are combined with a plastic matrix. In general, the most common type of matrix used for aircraft applications is a *polymer* matrix composite (PMC). For primary load carrying composite structures in large aircraft, the combination of *carbon fiber reinforcement* and a *polymer* (or *plastic*) *matrix* is currently the standard material system. This material system is known as a carbon fiber reinforced plastic (CFRP). Epoxy is the most common polymer used for the matrix.

1.3.1 Fiber (Reinforcement). The fiber is the major load carrying component of the composite. Fibers can be made from materials such as carbon, graphite, glass, boron, aramid (such as Kevlar® and Nomex®), or quartz. Each of these fibers has its own advantages and disadvantages. Stiffness, static strength, impact strength, fatigue performance, electrical conductivity, electrical permeability, and thermal properties are among the properties that are considered when selecting a fiber. Long, continuous fibers are considered to be high performance since the mechanical properties are maximized in this form. This form is the most common type for aircraft applications. Detailed discussions about various fiber types and fiber manufacturing processes may be found elsewhere.[2,3]

Discontinuous fibers (chopped fibers) have reduced properties because the load path of the fiber is disrupted. They are not usually suitable for primary aerostructures, though there are exceptions. Discontinuous fibers may also be considered for some secondary structures.

1.3.1.1 *Carbon Fiber.* Carbon fiber is the typical choice for primary structures of modern large aircraft. Carbon fiber, 93–95% carbon, is similar to graphite fiber, which is >95% carbon. From the structural analyst's perspective, both may be treated in the same manner. Carbon fibers have relatively large stiffness and strength, and high resistance to fatigue damage. This makes them suitable for primary structures. Carbon fiber is considered to be a high performance reinforcement choice.

Carbon fibers can be categorized as one of the following: low modulus, standard modulus, intermediate modulus, high modulus, or ultra high modulus. Standard modulus and intermediate modulus fibers are considered to be "high performance", and exhibit good strength and stiffness properties. These fibers are typically used for large civil aircraft and military aircraft.

Excerpt from *Practical Analysis of Aircraft Composites* Copyright © 2017 by Brian Esp

Some intermediate modulus fiber types are IM7, IM8, T800, T1000, and IMS. Some standard modulus fiber types are AS4, T300, T700, and T650. Intermediate modulus fibers typically have higher strength than standard modulus fibers. Carbon fibers may also be categorized as one of the following: high modulus (HM), high strength (HS), or intermediate modulus (IM).

1.3.1.2 ***Glass Fiber.*** There are several types of glass fibers: E-glass (electrical grade), S-glass, S2-glass (structural grade), and other types. Compared to carbon fibers, glass fibers may have a higher strain to failure and usually have a greater ability to absorb energy. Though glass fibers cost significantly less than carbon fiber, they are far less stiff. The strength of glass fiber composites is also lower than standard modulus or intermediate modulus carbon fibers. Also, glass fibers do not perform as well in fatigue as carbon fibers (See Chapter 24). For the previously stated reasons, glass fibers are not usually considered for primary structures in large aircraft, but small aircraft may use them for primary structures. Glass fibers are also widely used in other industries. Glass fiber is considered to be a "medium performance" or "low performance" fiber.

For large aircraft, glass fibers may be used for secondary structures such as radomes, fairings, wingtips, floor panels, and interiors. They may also be used for specialized applications such as helicopter rotor blades, where stiffness is not the driving factor.

1.3.1.3 ***Boron Fiber.*** In the 1970s, boron fibers were used on the F-14 and F-15. Boron fibers have a relatively large diameter, which increases the compressive strength. However, this prevents them from being used in woven fabric form. Boron fibers are also very hard, making them difficult to drill. Due in part to the high cost of boron fiber, the use of carbon fiber is far more common in current aircraft applications. However, boron fibers may be used for repairs to aluminum structures because there is no potential for galvanic corrosion and the coefficient of thermal expansion is more similar to aluminum (See Chapter 21).

1.3.1.4 ***Aramid Fiber.*** Kevlar® and Nomex® are aramid fibers. They have high toughness (ability to absorb energy) and high tensile strength. They may be used for specialized applications such as engine containment rings. They may also be used for fairings, radomes, or other sandwich structure applications. Aramid fibers are sometimes used to hybridize laminates, which can improve certain mechanical properties (but usually at the expense of other properties). However, because of their poor compressive strength, aramid fibers are not usually used for high load applications. They also have a tendency to absorb moisture, which negatively affects many of their mechanical properties.

Excerpt from *Practical Analysis of Aircraft Composites* Copyright © 2017 by Brian Esp

1.3.2 Matrix. The matrix material is softer and of lower strength than the fiber. However, the matrix is necessary to bond the stiff and strong fibers together. The matrix allows the composite to resist compression loading and protects the fibers from physical and environmental threats such as fuel, hydraulic fluid, paint strippers, handling, and abrasions. In the presence of an individual broken fiber, the matrix will transfer the load via shear in a similar manner as a bonded joint. The matrix also provides an energy-absorbing mechanism via localized cracking/delamination. This can improve impact damage resistance and also "soften" the detrimental effects caused by stress concentrations.

A composite material (also known as a composite material *system*) is often classified by one of the following broad categories, which is based on the type of matrix:

- PMC — polymer matrix composite
- CMC — ceramic matrix composite
- MMC — metal matrix composite
- CCC — carbon-carbon composite (carbon matrix)

A PMC is the most commonly used type for aircraft structures. A polymer matrix (cured state) may also be referred to as a resin (uncured state). Though there are many potential polymer candidates, epoxy (a thermoset) is the most common choice. A thermoset polymer undergoes an irreversible chemical change once it has been "set" (cured). Epoxy has a desirable combination of producibility properties (excellent adhesion, low levels of volatiles, ease of use, etc.) and mechanical properties (strength, stiffness, ductility, toughness, resistance to the environment, etc.). First-generation epoxies are relatively brittle, exhibiting poor impact damage resistance. Modern epoxies, with toughening modifiers, have relatively good impact damage resistance. High performance epoxies are typically cured at either 250°F (121°C) or 350°F (177°C). Room temperature cures are also possible, but mechanical properties for elevated cures are usually more advantageous. The matrix affects several *laminate*-level properties such as:

- compressive strength
- impact strength
- damage resistance
- interlaminar strength and resistance to delamination
- amount of pseudo-plasticity for notched laminates (See Chapter 10)
- bearing strength
- strength and stiffness properties for various environmental conditions (temperature, moisture, etc.)

Excerpt from *Practical Analysis of Aircraft Composites* Copyright © 2017 by Brian Esp

The transverse and shear strength/stiffness properties of an individual composite ply are highly affected by the properties of the matrix. However, for practical *multi-directional* laminates, the transverse and shear strengths/stiffnesses, at the ply level, are *not* heavily influenced by the matrix. Therefore, the effect the matrix has on the individual ply is not necessarily indicative of the effect it has on a practical laminate.

The strength of a PMC is significantly affected by temperature and moisture. This is especially true for properties and failure modes that are dominated (or highly affected) by the matrix (interlaminar properties, compression, bearing, etc.). These properties are further discussed in Chapter 21.

Other types of polymer matrix materials include bismaleimide (BMI), polyimide, phenolic, cyanate ester, thermoplastic, polyester, and vinyl ester. Bismaleimides are a subset of polyimides, but other types of polyimides have significantly different properties than bismaleimides. Aside from the mechanical properties, some of the factors to consider when choosing a matrix are service temperature, ease of processing, supportability, and ease of repair. For service temperatures that are higher than appropriate for an epoxy, a composite with a BMI matrix is a typical option for aircraft strutures. BMI is more expensive than epoxy and therefore only used when necessary. BMI may also be tougher than epoxies.[4] CYCOM® 5250-4 is a commonly used toughened BMI with a cure temperature of about 400°F (204°C) and may be post-cured to a higher temperature. For cure temperatures higher than this, other types of polymers may be used. For example, some polyimides have a service range of about 600°F (316°C).

1.3.3 Interphase. The interface between the fiber and matrix is known as the interphase. A *sizing* (or *finish*) is a coating applied to the fibers before they are combined with the matrix. The sizing protects the fibers during the manufacturing process and improves the bond strength between the fiber and matrix. The interface strength affects various mechanical properties. For example, a strong interface may improve the static strength of a laminate; a weaker interface may improve impact damage resistance via energy-absorbing mechanisms.

1.4 COMPOSITE MATERIALS

1.4.1 Ply (Lamina). A *ply* (consisting of fibers and a matrix), also known as a *lamina* or *layer*, is a *composite material*. Continuous fibers can be oriented in a single direction (or multiple directions) within the ply. For aircraft applications, plies may be in a prepreg or dry fabric form.

A *prepreg* is a common form and is created by pre-impregnating (surrounding) the fibers with a resin (matrix) that is in a semi-cured state (B-stage). In this state the fibers and resin are combined but are still flexible enough to be formed and

Excerpt from *Practical Analysis of Aircraft Composites* Copyright © 2017 by Brian Esp

placed in tooling. After the prepreg layers are laid in place, the laminate is fully cured (the cured resin is referred to as the matrix). At this point the laminate is capable of carrying load. Prepreg forms are tape, slit tape, fabric, sheet, and tow/roving. Slit tape is tape that has been slit/cut to a smaller width. This is beneficial when the structure has compound surface or smaller details need to be formed. Tow/roving are commonly used with filament winding machines. For this book, a composite ply is considered to be a cured layer with fibers in one or more directions; the fibers are oriented in the plane of the ply as shown in Figure 1.4.

Although the use of prepregs is common for large aircraft applications, a layup can also consist of *dry* fabric layers that are impregnated with an uncured, low viscosity resin. This is known as a wet layup. Wet layups may be considered for repairs but are not commonly used for the original design of structures for large aircraft. Various other manufacturing methods are discussed in Section 1.10.

1.4.2 Unidirectional Ply. For a unidirectional ply, the fibers are all aligned in a single direction (See Figure 1.4). A unidirectional ply is also known as a uni-ply or UD ply. In tape form, it may also be called a uni-tape or a tape ply. Laminates with unidirectional plies have increased static strength and elastic properties compared to laminates with woven fabric plies (See also Chapter 21). Unidirectional plies are frequently used for high performance aerostructures.

The 1-direction (longitudinal) is aligned with the fibers and the 2-direction (transverse) is normal to the fiber direction (See Figure 1.4). The 1-2 coordinate system is used for the individual plies, and the *x-y-z* coordinate system is used for the laminate coordinate system (See Section 1.5).

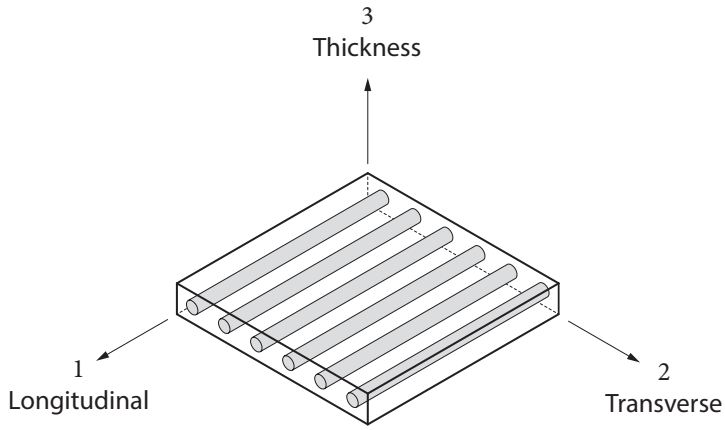

Figure 1.4 Unidirectional ply (not to scale). The fibers are aligned with the 1-direction (longitudinal). The diameter of a carbon fiber diameter is about 0.0002–0.0004 inch (5–10 μm), which is much smaller than a human hair. Fibers are much more closely packed than shown.

Excerpt from *Practical Analysis of Aircraft Composites* Copyright © 2017 by Brian Esp

1.4.3 Fabric Ply. Fabrics may be in prepreg or dry form. For woven fabrics, such as a plain weave fabric shown in Figure 1.5, the weaving process does not allow the fibers to remain straight. Also, the fibers are not as closely packed as for unidirectional plies. These characteristics reduce the static strength and stiffness of woven fabric plies. This is especially true for compression loading because of the fiber waviness. However, a fabric ply is more easily draped over a compound surface (doubly curved) than is a unidirectional prepreg ply. Uni-tape prepregs with small widths, used with a tape laying machine, are also effective for compound surfaces.

Woven fabrics are often used at the outer layers of a laminate to improve abrasion resistance and also help to prevent delamination when holes are drilled. Woven fabrics also improve resistance to damage from impacts. Because of the additional weaving procedure, the material cost is increased compared to unidirectional plies. However, labor cost may be decreased because the plies are thicker (fewer plies need to be laid up).

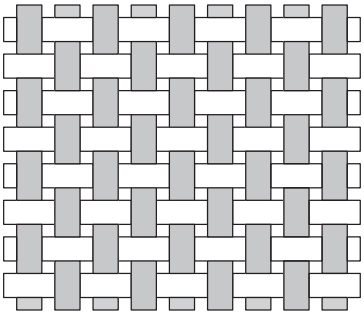

Figure 1.5 Plain weave fabric ply. Not to scale.

As opposed to *woven* fabrics, the fibers of a *multi-directional non-crimp* fabric (non-woven fabric) are overlapped but remain straight. In dry form, the fibers are held together by light threads. The result is comparable to overlapping unidirectional plies. Because of the fiber straightness, the stiffness and static strength of a non-crimp fabric are improved compared to a woven fabric. A dry *unidirectional* non-crimp fabric has all the structural fibers in a single direction. The fibers are held together by light threads. With respect to the fibers, this type of fabric is functionally equivalent to a unidirectional ply.

1.4.4 Carbon/Epoxy. For large aircraft primary structures, the use of carbon fiber reinforcement and an epoxy matrix is common. This material system is known as carbon/epoxy, carbon fiber/epoxy (CF/EP), carbon fiber-reinforced epoxy, or carbon fiber reinforced plastic (CFRP).

Excerpt from *Practical Analysis of Aircraft Composites* Copyright © 2017 by Brian Esp

1.5 COMPOSITE LAMINATES

1.5.1 Laminate. A *laminate* consists of two or more plies (laminae). A *layup* is a processing method where plies are placed on top of each other and is defined by the material system(s), orientations, and stacking sequence of the plies (See also Section 1.10). Because of the similarity between the terms *laminate* and *lamina*, the term *ply* is used throughout this book (instead of *lamina*). For a typical high performance laminate, the plies (prepreg or dry preform layers with added resin) are consolidated (bonded together) at elevated temperature and pressure, often with the use of an autoclave. There are a variety of other manufacturing methods that may also be used (See Section 1.10).

Although all the plies in a laminate could be oriented with fibers aligned in the same direction, properties such as compressive strength, bearing strength, damage resistance, strength after impact, and transverse strength would be undesirable. Therefore, *practical* laminates are usually *multi-directional*, meaning the plies/fibers are oriented in different directions within the laminate. The laminate coordinate system is the *x-y-z* system, as opposed to the ply's local 1-2 coordinate system (See Figure 1.6). The ply's orientation angle is with respect to the *x-y-z* system (See also Section 1.5.4).

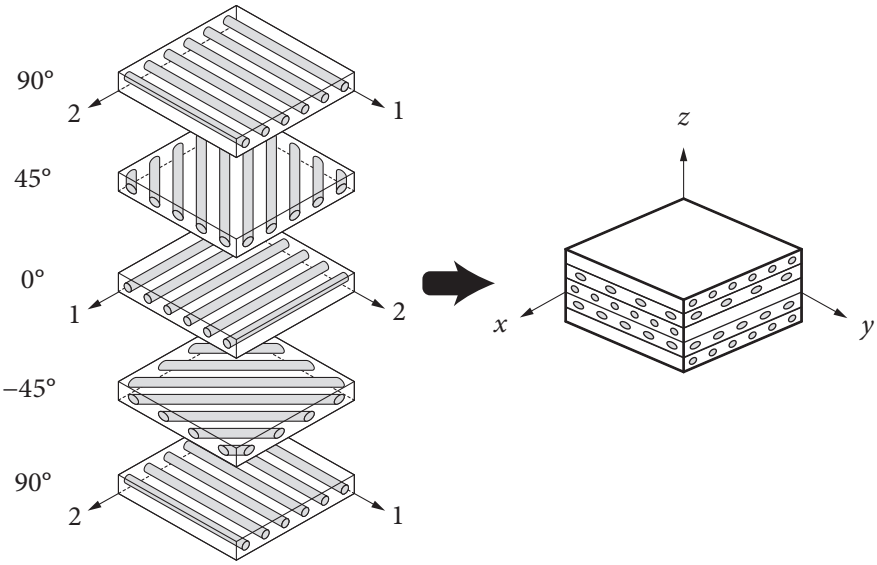

Figure 1.6 Multi-directional laminate and *x-y-z* coordinate system (laminate coordinate system).

Excerpt from *Practical Analysis of Aircraft Composites* Copyright © 2017 by Brian Esp

1.5.2 Hybrid Laminate. A hybrid laminate consists of plies with more than one material system. For example, carbon fiber/epoxy plies can be used in the same laminate as glass fiber/epoxy plies. This may be done to improve impact damage resistance, reduce cost, improve producibility, improve corrosion resistance, improve notched strength, etc. However, while some properties may be improved via hybridization, other properties may be reduced. Helicopter rotor blades may be hybrid laminates consisting of glass fiber and carbon fiber. Tape plies and fabric plies of the same material system may also be combined, which is classified as a hybrid laminate.

1.5.3 Fiber Metal Laminate (FML). Fiber metal laminates are hybrid laminates that have both metal layers and fiber/matrix layers. Some important properties that are affected by an FML are resistance to impact damage, fatigue resistance, corrosion, ability to tailor the fiber/matrix layers, elastic modulus, weight, and fire resistance. The properties of an FML may be better or worse than those of the individual layers.

GLARE® (glass laminate aluminum reinforced epoxy) is a fiber metal laminate that is composed of aluminum layers and glass fiber/epoxy layers (plies). GLARE® is used for primary structures on the Airbus A380. GLARE® may also be used for repairs to aluminum structures. TiGr is an FML that is composed of titanium layers and graphite/matrix layers (carbon/matrix). ARALL is an aramid reinforced aluminum laminate.

1.5.4 Laminate Codes. The orientation and position of each ply in a laminate may be expressed in multiple ways. Though there are no universal rules, some of the common ways of representing the ply orientations and the laminate stacking sequence (LSS) are presented in this section. "ASTM D6507: Standard Practice for Fiber Reinforcement Orientation Codes for Composite Materials" may also be considered.[5] A 0° ply has its 1-direction aligned with the laminate's x-direction, and a 90° ply has its 1-direction aligned with the laminate's y-direction. The first ply in the sequence is located at the most negative z-position (See Figure 1.7).

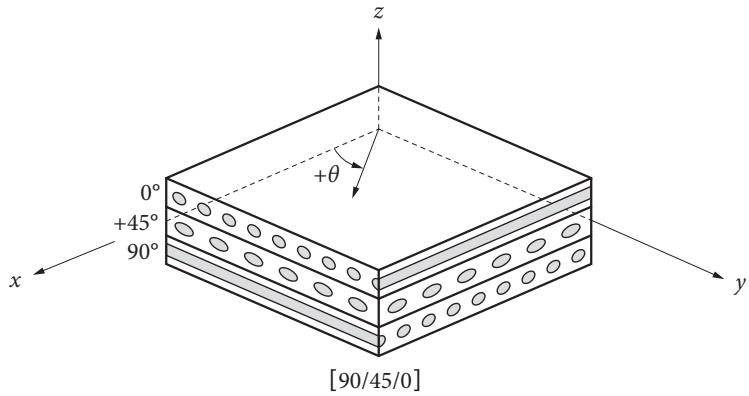

Figure 1.7 Coordinate system and laminate coding for a [90/45/0] laminate.

Excerpt from *Practical Analysis of Aircraft Composites* Copyright © 2017 by Brian Esp

1.5.4.1 ***Single Material System.*** If using just one type of material system, there is no need to specify the material as part of the sequence. The degree symbol is omitted for convenience. Some examples, which are not necessarily indicative of practical laminates, are:

- $[0/0/0/0] = [0_4]$
- $[0/+45/90/-45/-45/90/+45/0] = [0/+45/90/-45]_S$ = symmetric laminate
- $[0/+45/90/+45/0] = [0/+45/\overline{90}]_S$—the use of the "overbar" indicates the laminate is symmetric about the given ply, but the ply with the overbar is not repeated; in this case, there is only one 90° ply
- $[0/90/0/90/0/90] = [0/90]_3$
- $[0/+45/-45] = [0/\pm45]$ (upper sign is positioned first)
- $[0/0/+45/-45/-45/+45/0/0] = [0_2/\pm45]_S$ (upper sign is positioned first)
- The "S" symbol indicates the laminate is symmetric

1.5.4.2 ***Hybrid.*** The coding rules for a single material system are applicable to hybrid laminates. However, the material associated with each ply must be designated. This may be done with a superscript (or a subscript as per ASTM D6507[5]) as follows:

- $[0^G/45^C/-45^C/90^C]_S$

  C = carbon/epoxy ply
  G = glass/epoxy ply

Laminates that contain both unidirectional plies and fabric plies of the same material system are also considered hybrid laminates. An example is:

- $[0^F/45^T/-45^T/90^T]_S$

  T = unidirectional tape ply
  F = fabric ply

1.5.5 Ply Percentages and Fiber Percentages. For a single material system with unidirectional plies of equal thickness, a simple manner to express a laminate is via a percentage of plies in the standard orientations. Many laminates are composed of unidirectional plies in the 0°, +45°, −45°, and 90° orientations. To use ply percentage coding, there must be an equal number of +45° and −45° plies. The +45° and −45° plies are grouped into a single percentage, termed ±45°. When expressing laminates as ply percentages, *parentheses* are used as opposed to brackets. The form is (%0°, %±45°, %90°). For example:

- $[0/+45/-45/90]_S$ is (25/50/25) or (25/50/25)%

Excerpt from *Practical Analysis of Aircraft Composites* Copyright © 2017 by Brian Esp

Clearly, this approach cannot fully describe the laminate since the stacking *sequence* is not defined. For a symmetric and balanced laminate, the in-plane elastic properties can be determined via ply percentages. However, the out-of-plane elastic properties (bending and twisting stiffness) cannot be determined from ply percentages (See Chapter 4).

For fabrics with fibers in multiple directions within the ply, it is not appropriate to use ply percentages. Instead, *fiber percentages* are used. For example, consider a $[0/0/45]_S$ laminate that consists of plain weave fabric plies. The fiber percentages in the (%0°, %±45°, %90°) directions are (33/33/33)%. Fiber percentages may also be used for laminates made from unidirectional plies, which is equivalent to using ply percentages. The use of fiber percentages is flexible because it is appropriate for both unidirectional plies and fabric plies.

1.6 MATERIAL CHARACTERIZATION

For engineering purposes, a material must be characterized in a mathematical manner. Simplifying assumptions are often made for analytical convenience. This section *introduces* the basic material types. Chapter 3 provides a detailed mathematical description of the elastic stress-strain relationships of these materials.

1.6.1 Isotropic. An isotropic material exhibits properties that are the same in all directions. The elastic properties can be characterized with 2 independent elastic constants (elastic modulus and Poisson's ratio). Aerospace metals are often approximated as isotropic. This is the simplest material to characterize.

1.6.2 Orthotropic. A general orthotropic material has varying properties in its 3 perpendicular planes. In 3D space, the elastic properties for an orthotropic material are characterized by 9 independent elastic constants.

1.6.3 2D Orthotropic in Plane Stress. If a general orthotropic material does not have stress in its z-direction, it is in a state of plane stress. A *ply* is typically assumed to be a 2D orthotropic material in plane stress (thin laminates). A 2D orthotropic material can be characterized by 4 independent elastic constants. This material characterization is the *basic building block* for structural analysis of composite laminates and is further discussed in Chapter 3. Note that a ply is *not always* in a state of plane stress and that interlaminar stress components may exist (See Chapter 8).

1.6.4 Anisotropic. An anisotropic material is the most general type of material. See Chapter 3 for further discussion.

Excerpt from *Practical Analysis of Aircraft Composites* Copyright © 2017 by Brian Esp

Excerpt from *Practical Analysis of Aircraft Composites* Copyright © 2017 by Brian Esp

1.6.5 Homogeneous. A homogeneous material has properties that are the same at every point. On a macroscopic scale, a ply may be considered homogenous if the individual fiber and matrix properties are "smeared" together. *Macromechanics* assumes that a ply is homogeneous.

1.6.6 Macromechanics. Macromechanics considers the ply to be the lowest-level material and does not directly consider the properties of the individual fiber and matrix. The fiber and matrix are effectively "smeared" together to create a homogenous layer (the ply) that is a 2D orthotropic material in a state of plane stress.

1.6.7 Micromechanics. Micromechanics is an approach that considers the fiber and matrix as separate materials. Using the properties for the individual constituents, the ply properties (stiffness, strength, etc.) can be analytically determined. Micromechanics solutions are not commonly used for strength prediction because of the lack of accurate predictive capability (See Chapter 9 and Appendix A). However, *some* elastic and hygrothermal properties are relatively well predicted via micromechanics. Though micromechanics solutions are not used for final predictions for aircraft structures, they may be useful for research efforts, trade studies, academic study, or preliminary analysis.

1.7 GENERAL MATERIAL PROPERTIES

1.7.1 Brittle and Ductile Materials. A brittle material is linear elastic up to the point of fracture. A ductile material exhibits plasticity (the material has significant elongation after yielding). Stress-strain curves for brittle and ductile materials are shown in Figure 1.8.

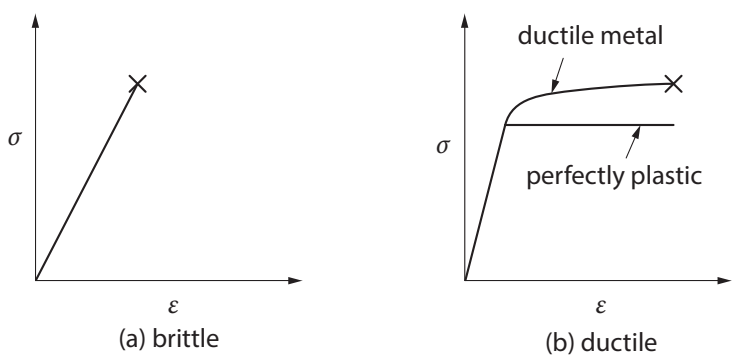

Figure 1.8 Stress-strain curves for brittle and ductile materials. Engineering strain shown (as opposed to true strain).

Ductility has a significant influence on the *static ultimate load capability* (complete separation via fracture) of parts with stress concentrations. Consider the uniaxially loaded part with a hole, as shown in Figure 1.9. For both brittle and ductile materials, the initial response exhibits a stress concentration in the vicinity near the hole, peaking at the edge of the hole. See Chapters 10 and 11 for further discussions regarding stress concentrations.

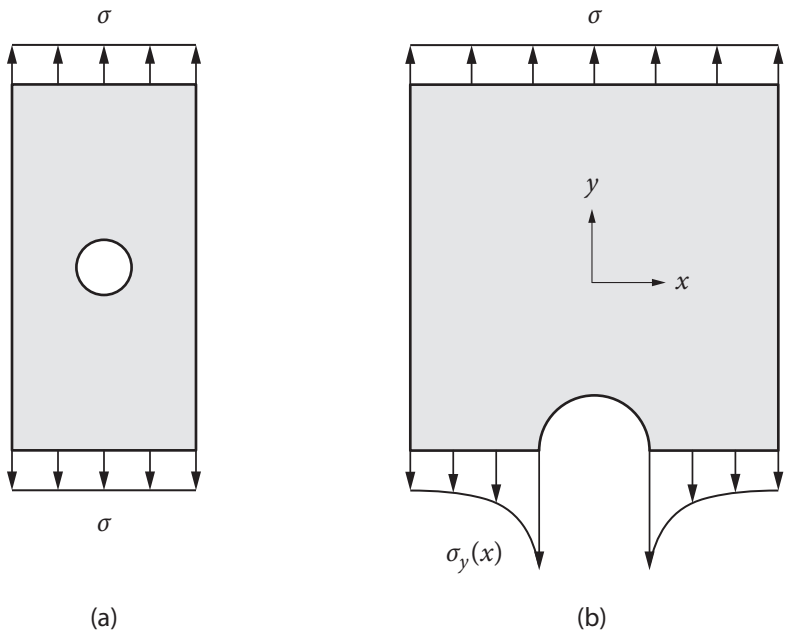

Figure 1.9 Initial stress response for a uniaxially loaded plate with a hole: (a) overall part with hole; (b) top half of part, cut at the middle, showing the stress concentration.

If the material is brittle, fracture occurs at the stress concentration, at a stress level equal to the fracture stress of the material (See Figure 1.10(a)). The initial local fracture immediately propagates through the part, and complete separation occurs. On the other hand, if the material is ductile, the region with the local stress concentration yields and can continue to strain *without fracture*. This allows the part to accept further loading, until the hole edge location reaches the fracture strain. In turn, for ductile metals, stress concentrations do not significantly affect the ultimate load capability. For a perfectly plastic material, the load carrying capability is only reduced by the amount of area removed by the hole (net section capability). The result is that the ultimate load capability of the perfectly plastic material is far greater than that of the brittle material. This can be observed by comparing the total area under the stress level curves shown in Figure 1.10.

Excerpt from *Practical Analysis of Aircraft Composites* Copyright © 2017 by Brian Esp

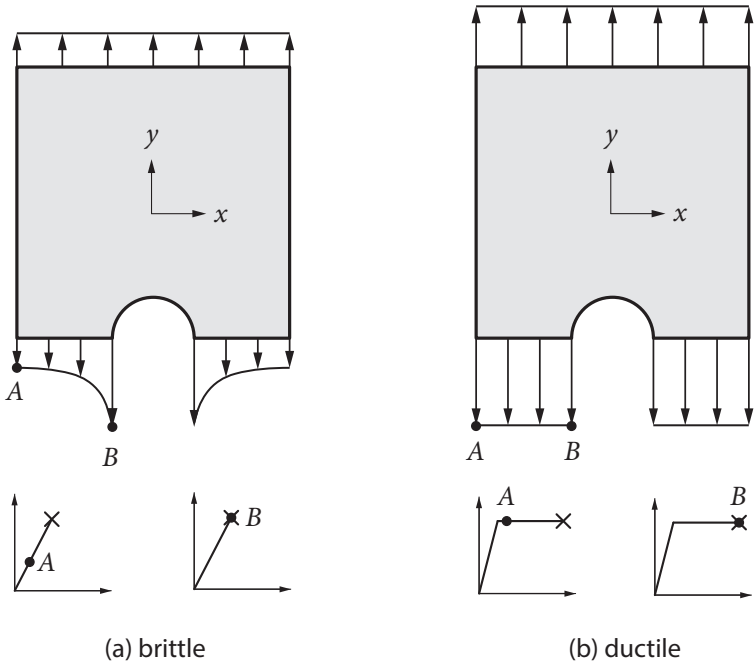

Figure 1.10 (a) Stress response for fracture at point *B* for a brittle material; complete fracture immediately occurs at the same load. If the material is ductile as in (b), this is the stress response at the onset of yielding at point *B*, but the part can continue to be loaded before complete separation. (b) Response at fracture at point *B* for a ductile material; complete fracture immediately occurs at the same load.

Individual carbon fibers are usually considered to be brittle. Unnotched laminates may also be brittle (See Chapter 9). However, multi-directional composite laminates with a hole do not behave as either brittle or ductile. Rather, the response is somewhere in between. This important distinction is introduced in Chapter 2 and further discussed in Chapter 10.

Note that the previous discussion is with respect to the static load capability. When *fatigue* loaded, stress concentrations are significant for ductile materials. For metals, stress concentrations are often the origin of fatigue damage and the onset of visible cracking. See Chapters 2 and 24 for further discussion.

1.7.2 Specific Strength. Specific strength is the strength-to-density ratio (or strength-to-weight ratio). When weight is of importance, the use of the specific strength allows for a normalized comparison to be made between different materials. Since composites usually have a lower density than metals, specific strength is often a better comparison approach than absolute strength. For reference, the density of carbon/epoxy is about 0.057 lb_m/in^3. The density of aluminum is about 0.100 lb_m/in^3.

Excerpt from *Practical Analysis of Aircraft Composites* Copyright © 2017 by Brian Esp

1.7.3 Specific Stiffness. Specific stiffness is the stiffness-to-density ratio (or stiffness-to-weight ratio). This term is used for the same reasons that specific strength is used.

1.7.4 Statistical Distribution of Properties. There are two standard classifications for the anticipated *lower bound* strengths: A-basis and B-basis. The A-basis, B-basis, and typical properties are defined as follows. Establishing a lower bound strength is especially important for properties that have significant scatter. See Chapter 21 for further discussion.

- A-basis: 95% lower tolerance bound for the upper 99% of a specified population
- B-basis: 95% lower tolerance bound for the upper 90% of a specified population
- Typical: arithmetic mean of a specified population

1.7.5 Thermal Expansion. The coefficient of thermal expansion (CTE), α, relates a temperature change to the amount of expansion (or contraction) of a material. In general, the CTE is a function of temperature. This should be considered when performing the structural analysis.

1.7.6 Moisture Expansion. The coefficient of moisture expansion (CME), β, relates moisture change to the amount of expansion (or contraction) of a material. The CME is also known as the CHE (coefficient of hygroscopic expansion).

1.7.7 Temperature and Humidity Effects. The combination of thermal and moisture effects is referred to as *hygothermal* effects. While the CTE and CME relate the amount of *expansion* to temperature and humidity changes, a composite's stiffness and strength properties are also a function of temperature and humidity. *Strength*, most notably, may be significantly affected by hygrothermal effects (See Chapter 21). This must be considered when sizing/designing composite structures. Stiffness is less affected by temperature and moisture than strength.

1.8 GENERAL ADVANTAGES OF COMPOSITE MATERIALS

Composite materials are typically compared to metals when discussing advantages and disadvantages. Although each of the following items are presented separately, all items should be compared *simultaneously* to determine if a composite material is the correct choice for the application. Composite materials are not always superior to metals, and the best material choice may not be obvious. For

Excerpt from *Practical Analysis of Aircraft Composites* Copyright © 2017 by Brian Esp

convenience, the term *composite* refers to a composite laminate unless otherwise stated. Chapter 2 also compares composites to metals, but the focus is on the analytical differences.

NOTE: The following discussion *may* be applicable to a given application and is presented to inform the reader of various factors to consider.

1.8.1 Stiffness. Carbon fiber composites generally have greatly improved specific stiffness (stiffness-to-weight ratio) when compared to metals (See Section 1.11). Glass fiber composites have a relatively low specific stiffness when compared to carbon fibers and metals.

1.8.2 Strength. The strength-to-weight ratio (specific strength) of an unnotched (pristine) carbon fiber laminate is better than metals. However, the presence of open holes, mechanically fastened joints, or impact damage significantly reduces the load carrying capability of composite structures. Furthermore, a composite with a polymer matrix has a reduced strength in the hot/wet and cold/dry environments. These conditions reduce the specific strength of carbon/epoxy laminates to a value closer to that of typical aluminum aerospace alloys. Even when considering these effects, modern carbon/epoxy laminates may have a larger specific strength than metals (See Section 1.11).

1.8.3 Weight. Weight comparisons are complex and cannot be addressed in a simple manner. Some general considerations are presented in this section.

Composites are less dense than metals. Therefore, weight can often be reduced when using composites, though not always. Carbon fiber composites have large stiffness-to-weight and strength-to-weight ratios (typically larger than metals). However, composites are sensitive to stress concentrations, impact threats, and the effects of interlaminar stresses. These effects may limit weight savings.

Aluminum may corrode in the presence of carbon fiber composites. To avoid corrosion of parts that are in contact with carbon fiber composites (such as fittings and fasteners), titanium or steel are commonly used. These denser materials may reduce some of the potential weight savings. To address lightning strike protection, composite structures may require additional aluminum parts. The additional parts would not be needed if the structures were metallic. Even with these considerations, properly implemented composite structures can sometimes reduce the weight of a structure when compared to metals.

1.8.4 Stealth. Carbon fiber composites have significant advantages over metals for reducing the radar signature of an aircraft. Most modern military aircraft use composite external structures due, in part, to this characteristic.

Excerpt from *Practical Analysis of Aircraft Composites* Copyright © 2017 by Brian Esp

1.8.5 Cost. The material cost of carbon fiber is relatively high. However, the unique processing methods for composites may allow for reduced cost via part reduction, lowered assembly cost, less number of fastened joints, etc. Operating cost benefits may be achieved by weight reduction (lower fuel cost) and durability improvements (lower maintenace cost). The long-term operating costs associated with maintenance, repair, inspection, etc. must be considered.

Accurate cost comparisons are not easily made, and many different factors must be considered. Some of the cost factors are material cost, producibility and tooling, assembly, maintenance, design and analysis, testing and certification, repairs, and existing knowledge and databases. In general, composites do not have a clear cost advantage or disadvantage when compared to metals. The most cost-effective solution is a function of the specific application.

1.8.6 Fatigue/Durability. Carbon fiber composites exhibit excellent fatigue properties, outperforming their metal counterparts (provided the loading is in the plane of the fibers). When metal parts crack, they need to be repaired in order to maintain safe operation. For a fixed wing aircraft, carbon fiber composite structures will generally not experience significant fatigue damage during the lifetime of the aircraft. In turn, this can reduce the long-term cost of ownership. However, the fatigue performance of composites can be poor when loaded such that interlaminar stresses are relatively large. Delamination propagation is one such example. See Chapters 8 and 24 for further discussion.

1.8.7 Corrosion. Many composite materials are very resistant to corrosion and do not exhibit the typical stress-corrosion problems associated with metals (See Chapter 22). This can translate to significant reductions in cost when the total life of the structure is considered.

1.8.8 Producibility. Some composite parts are easily produced, while others are not. Since the processing techniques between composites and metals are dramatically different, the producibility options and limitations must be identified early in the design process. Processing of composites can be complex, and problems may not be identified early or easily corrected. Also, composite structures may require more expensive tooling and may have lower yields (increased number of scrapped parts).

1.8.9 Aerodynamic Smoothness and Complex Shapes. Composites may be shaped into aerodynamically smooth surfaces with relative ease. This is especially advantageous for small aircraft because of the relatively low cost of tooling. Also, some shapes that are very complex may be more easily produced with composites.

Excerpt from *Practical Analysis of Aircraft Composites* Copyright © 2017 by Brian Esp

1.8.10 Tailored Design. A simple quasi-isotropic laminate has in-plane elastic properties that are the same in all directions (See Chapter 4). However, the plies can be arranged to specifically match the requirements of the structure. This is known as tailoring. Strength and stiffness can be increased in a certain direction at the sacrifice of other directions. For example, many structures have a primary loading direction. A greater percentage of fibers (bias) can be oriented in the primary direction to withstand the larger loads. This unique capability allows structures to be optimally designed and additional weight savings to be realized. However, standard design rules put limitations on the amount of bias (See Chapter 22). Laminates that are excessively biased should usually be avoided.

1.8.11 Thermal Expansion. Many composite materials have very different coefficient of thermal expansion (CTE) values than metals. Most notable is that carbon fiber laminates have a CTE that is nearly zero. This is advantageous for applications where dimensional stability over a large temperature range is desired. Carbon fiber composites are often used for space applications because of this property.

1.8.12 Electrical Permeability. Metals are not electrically permeable (ability to pass radio frequencies through a material). However, materials such as glass fiber, quartz fiber, epoxy, cyanate ester, etc., are electrically permeable. Composite materials that have good electrical permeability characteristics are often used for radar covers (radomes). Carbon fibers have poor electrical permeability.

1.8.13 Aeroelastic Tailoring. Aeroelastic tailoring consists of tailoring the composite structure to address the effects of aerodynamic loading. For example, when a metal swept-back wing deflects upwards, it also twists. A composite wing can be designed to *couple* the bending and twisting properties such that wing twist will be minimized during upwards deflection (See Chapter 4). A forward-swept wing is particularly vulnerable to twisting at the tip of the wing. The experimental X-29 used a composite wing that was aeroelastically tailored to control wing twist. Aeroelastic tailoring is a specialized topic that is not covered in this book.

Excerpt from *Practical Analysis of Aircraft Composites* Copyright © 2017 by Brian Esp

1.9 GENERAL DISADVANTAGES OF COMPOSITE MATERIALS

NOTE: The following discussion *may* be applicable to a given application and is presented to inform the reader of various factors to consider.

1.9.1 Impact Resistance, Residual Strength, and Damage Detection. Compared to metals, laminated composites typically have low resistance to impact damage. After an impact, the individual plies may separate, reducing the residual strength. Furthermore, detecting delaminations is challenging. After a minor impact there may not be a visual indication that delamination occurred. Medium sized delamination (or damage that occurs on the backside of the impact) may be difficult to detect with the naked eye.

1.9.2 Sensitivity to Temperature and Moisture. Stiffness and strength properties of composites are usually sensitive to typical temperature and moisture environments. This is primarily because of the degraded properties of a typical polymer matrix. Failure modes that are dominated by the matrix are especially sensitive to environmental effects. Failure modes that are dominated by the fibers are less sensitive to environmental effects; some fiber types are resistant to environmental effects. See Chapter 21 for further discussion.

1.9.3 Cost. The cost of composites may be advantageous for some applications but disadvantageous for others. Aside from the higher raw material cost, the manufacturing costs are often expensive. This is due to the large amount of manual labor, expensive tooling, equipment, etc. Also, fasteners that are compatible with carbon fiber laminates are relatively expensive (titanium and high strength steel fasteners).

Design/analysis of composite structures is relatively complex, which can increase cost. The cost of establishing composite materials properties is relatively high, and databases are not well established. Due to various challenges, the cost of certification for composite aircraft is greater than for metals.

1.9.4 Through-the-Thickness Strength (Interlaminar Strength). The through-the-thickness strength of laminates is relatively weak compared to metals. Structural components may be subjected to significant interlaminar stresses, which can significantly reduce structural capability. Interlaminar failure modes are also sensitive to environmental effects, processing variability, and exhibit significant scatter (See Chapter 21). Furthermore, specialized analytical methods and additional testing may be required to determine the detrimental effect of interlaminar stresses. See Chapter 8 for further discussion.

Excerpt from *Practical Analysis of Aircraft Composites* Copyright © 2017 by Brian Esp

Excerpt from *Practical Analysis of Aircraft Composites* Copyright © 2017 by Brian Esp

1.9.5 Repairability. For composite structures, repairability with mechanical fasteners should be considered during the design phase. Failure to do so may make repairs excessively difficult or impossible to perform. Provided repairability is considered, repairs for composite structures are similar to those for metal structures. However, there are special considerations for repairs to composite structures. Bonded repairs may exhibit interlaminar failure modes (See Chapter 13). Mechanically fastened repairs may require more elaborate drilling procedures if the patch material is metal. Also, metal patch repairs to composite structures must consider the difference of stiffness, CTE, corrosion considerations, strength, and failure modes. See Chapter 15 for further discussion.

1.9.6 Compatibility with Aluminum. For large fixed wing aircraft, carbon fiber composites and aluminum alloys are the two most common materials used for primary structures. When aluminum is in close proximity to carbon fiber, there is a risk of galvanic corrosion of the aluminum. This can often be mitigated through the use of fiberglass barrier plies, sealants, adhesives, or other methods, but adds cost (See Chapter 22). Also, the very high CTE difference can lead to undesirable stresses in extreme temperature environments.

1.9.7 Electrical Conduction and Lightning Strike. Composites typically have low electrical conductivity. If protection from lightning strikes is required, an electrical path on the external structure is required. This can be created by adding a metal mesh to the composite, but adds cost and weight. Additional metal internal structure may be needed to create an electrical path.

1.9.8 Redistribution of Loads. Ductile aircraft metals are forgiving materials that usually allow for redistribution of loads via yielding (and associated large deformation) before fracture. Localized failures may be arrested by the surrounding redundant structural members. Composite materials exhibit less deformation before fracture (limited yield-like behavior). In turn, they are less forgiving in the presence of design, analysis, and manufacturing mistakes.

1.9.9 Analysis Challenges. Structural analysis of composites may require a higher level of skill than for metals. Composites have several unique failure modes that can present analytical and design challenges. The analysis methods for composites are not as standardized as for metals.

1.9.10 Mechanical Properties. Determining the material properties for composites is relatively expensive. Stiffness properties are relatively easy to obtain, but strength properties vary as a function of the layup, environment, failure mode, and other factors (See Chapter 21). Composite specific properties are required to address a variety of failure modes. Also, there is a lack of a centralized material

database for composites. While efforts are being made to develop standard composite material databases, they lag far behind databases for metals.

1.9.11 Part Candidates. High performance laminates have desirable in-plane properties. However, they have limited out-of-plane capability. Parts that have significant out-of-plane loading may not be good candidates to be made with laminates. However, some processing methods allow the fibers to be aligned in all directions. This improves out-of-plane capability, but in-plane capability is sacrificed. See Chapter 22 for further discussion.

1.9.12 Optimization. The thickness of a laminate is a multiple of the ply thickness, which may negatively affect structural optimization. Conversely, a metal part can be produced with any thickness. However, as discussed in Section 1.8.10, a laminate can also be tailored. This can improve structural efficiency.

1.10 MANUFACTURING METHODS

There are various processes used to manufacture composites. Requirements such as cost, time, producibility, and performance should be considered when selecting a process. Knowledge and selection of appropriate manufacturing methods are *integral to composite design.* Also, the choice of whether to use metals or composite materials is closely linked to the capabilities and shortcomings of different manufacturing processes. There are many books that discuss the topic of manufacturing of composites.[2, 3, 6–8] This book does not attempt to reproduce that information in detail.

A common process used in the aircraft industry is a *layup.* Here, plies are laid onto tooling (manually or with automation equipment) and then cured. Plies can be pre-impregnated with resin (prepreg) or can be dry fibers with added resin (wet layup). Prepregs are commonly used because they are easier to work with and the resin content and materials properties are better controlled. Pressure may be applied via an autoclave, vacuum, mechanically, or other methods. Elevated temperatures may be obtained via an autoclave, oven, heat blanket, or other methods. Original production parts are often processed differently than repairs. See Chapter 15 for further discussion. For many aerostructures, a prepreg layup that is cured in an autoclave (elevated temperature and pressure) is preferred because it yields high performance structures. The structural properties for a wet layup, cured at room temperature, are not as desirable.

Excerpt from *Practical Analysis of Aircraft Composites* Copyright © 2017 by Brian Esp

Some of the other processes used in the aircraft industry are:

- Filament winding
- Compression molding
- Resin transfer molding (RTM)
- Vacuum assisted resin transfer molding (VARTM)
- Injection molding
- Pultrusion

1.11 STRENGTH, STIFFNESS, MOMENT OF INERTIA, AND FATIGUE COMPARISONS

In this section, some basic property comparisons are made between carbon/epoxy laminates and typical aerospace metals. This is meant to serve as a brief overview and to provide the reader with perspective. For further discussion, see Chapters 21 and 24.

Isolated carbon fibers can have a specific strength greater than *10 times* that of aluminum. However, Figures 1.12 and 1.13 demonstrate that for strength-critical design, the potential weight savings are not nearly as dramatic. The actual weight savings of most in-service composite structures are about 10–25% (where composites are an appropriate choice). This is because:

1. The presence of the matrix adds weight, but does not significantly improve strength.
2. Practical laminates are multi-directional (plies oriented in different directions with the laminate). Plies oriented at 90° to the loading direction add weight but do not significantly improve strength in the loading direction.
3. The presence of a hole, fastener, or delamination (which may occur after an impact) significantly reduces the static load capability and must be accounted for (See Chapter 25). For these same conditions, metals are not affected to the same degree.
4. For composites, extreme environmental conditions can significantly reduce strength properties.
5. Interlaminar stresses (and weak interlaminar strengths) may reduce the structural capability.
6. Other factors as discussed in Section 1.8.3.

Excerpt from *Practical Analysis of Aircraft Composites* Copyright © 2017 by Brian Esp

A representative carbon/epoxy material system is IM7/8552. IM7 is an intermediate modulus carbon fiber (hence the "IM"), and 8552 is a toughened epoxy; both are produced by Hexcel Corporation. Since IM7/8552 has typical properties for a carbon/epoxy composite, *general* comparisons to typical aircraft metal alloys are shown in Figures 1.12 and 1.13; the detailed properties for IM7/8552 are presented in Chapter 21. Note that the properties shown in Figure 1.12 and 1.13 are for two specific carbon fiber/epoxy layups and select metal alloys. In general, there are a *variety* of composite material systems and metal alloys used in the aircraft industry, with ever-evolving material properties.

Data points for the unnotched strength (pristine condition), notched strength (open hole), mechanically fastened joint strength, and compression after impact (CAI) strength are briefly considered in this section. Subsequent chapters address these conditions in greater detail. The CAI strength is related to the barely visible impact damage (BVID) strength. The BVID strength is discussed in Chapters 20, 25 and 26. The specific strength/stiffness comparisons are based on the *remote stress*, σ, as shown in Figure 1.11. A quasi-isotropic laminate (elastic properties that are the same in all in-plane directions) and an example tailored laminate (additional reinforcement in the loading direction) are considered for the comparisons. The quasi-isotropic laminate is (25/50/25)% and the tailored laminate is (50/40/10)%. See Chapter 21 for the numerical stiffness/strength values.

Composites are sensitive to humidity and temperature, so these conditions must be considered. The typical environmental conditions to consider are cold temperature, dry (CTD); room temperature, dry (RTD); and elevated temperature, wet (ETW). The static strength of metals is relatively insensitive to typical aircraft temperature and moisture environments. However, metals may be susceptible to stress-corrosion (related to moisture) when fatigue loaded.

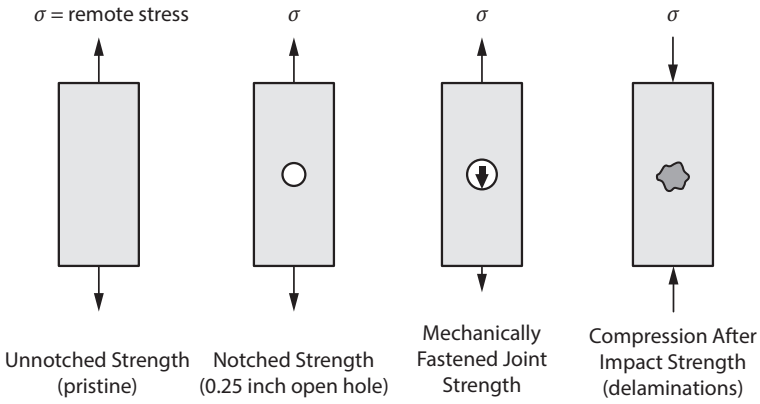

Figure 1.11 Various configurations used for the specific strength/stiffness comparisons in Figures 1.12 and 1.13. The strength/stiffness properties are based on the remote stress, σ.

Excerpt from *Practical Analysis of Aircraft Composites* Copyright © 2017 by Brian Esp

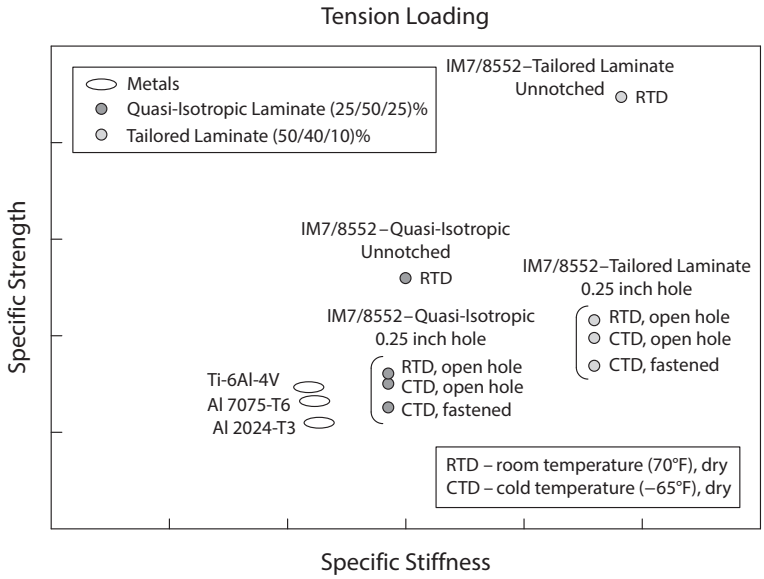

Figure 1.12 Tension loading. Approximate specific strength/stiffness for a carbon/epoxy (IM7/8552) laminate and for select metals. For the composite material, the tension strengths are lower for the CTD condition than for the ETW condition. See Chapter 21 for further discussion regarding mechanical properties.

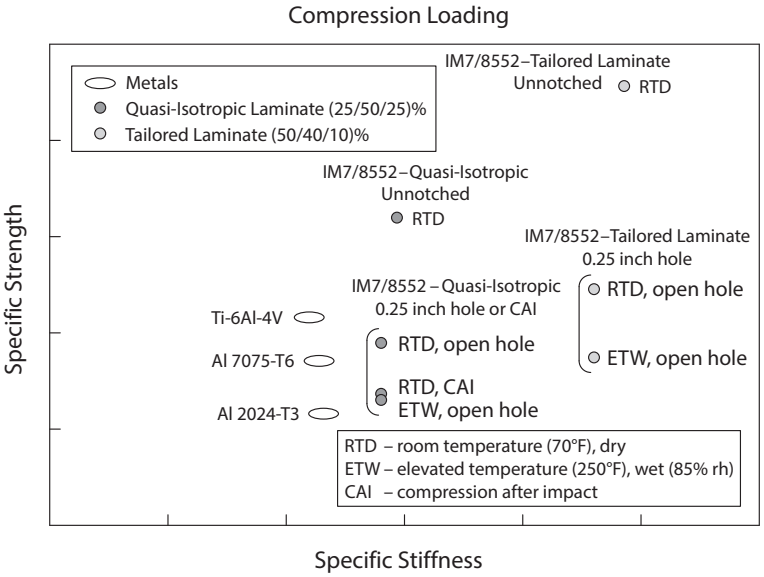

Figure 1.13 Compression loading. Approximate specific strength/stiffness for a carbon/epoxy (IM7/8552) laminate and for select metals. For the composite material, the compression strengths are lower for the ETW condition than for the CTD condition. For compression loading, the strength of a fastened joint is not listed. This is because it is usually an improvement compared to that of an open hole. See Chapter 21 for further discussion regarding mechanical properties.

Excerpt from *Practical Analysis of Aircraft Composites* Copyright © 2017 by Brian Esp

1.11.1 Stiffness Comparison. The immediate observation is that the specific stiffness of carbon/epoxy is superior to metals (See Figures 1.12 and 1.13). This is especially true for the tailored laminate. The presence of a hole does not affect a part's stiffness to the same degree as for strength.

1.11.2 Strength Comparison. The unnotched specific strength of carbon/epoxy laminate (See Figures 1.12 and 1.13) is far superior to that of metals. However, when considering the following practical conditions and environmental effects, the specific strength is comparable to metals:

- notched strength (laminate with a hole)
- joint strength with mechanical fasteners (for existing joints or to account for future repairs with mechanical fasteners)
- post-impact strength (to meet the static strength requirements)

1.11.3 Area Moment of Inertia Comparison. The bending strength and bending stiffness can be compared by evaluating the area moment of inertia (also known as the second moment of area). Composites are typically less dense than metals, which may affect the moment of inertia properties. For example, carbon/epoxy is about 60% as dense as aluminum and 35% as dense as titanium. Consider the moment of inertia for the rectangular plate shown in Figure 1.14. For the same total weight, the moment of inertia is increased by a factor of 8.0 for the material that is half as dense. This allows for greater efficiency for plate stability and plate bending. This amount of increased moment of inertia is only realized for a rectangular cross section.

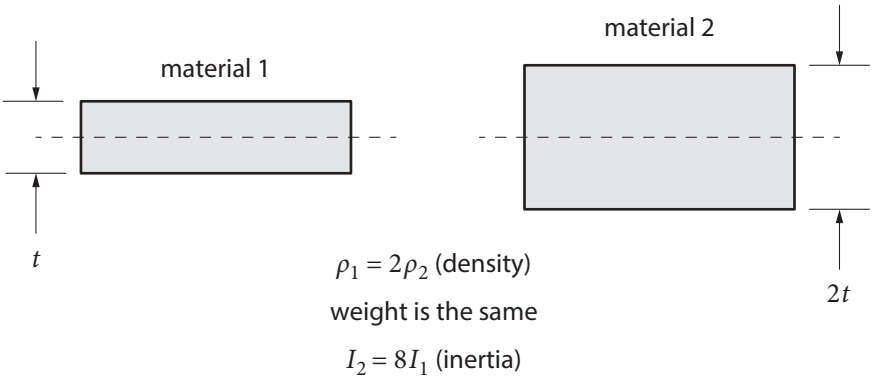

Figure 1.14 Area moment of inertia comparison for different density materials (rectangular cross section).

Excerpt from *Practical Analysis of Aircraft Composites* Copyright © 2017 by Brian Esp

For built-up structures such as beams, channels, angles, etc., the overall moment of inertia is dominated by the flange's (cap) distance from the neutral axis. In those cases, the increase in overall moment of inertia for the less dense material is not nearly as significant as that of just a flat plate (for the same overall physical boundary). However, the individual elements of the built-up structure (the flanges and webs) are effectively flat plates. Therefore, the increased moment of inertia of the less dense material has a beneficial affect to local stability of the flange and web.

1.11.4 Fatigue Comparison. Fatigue loading must be considered during the design process. Even if a metal structure is capable of withstanding the static loads, its weight may *need to be increased* to show acceptance for fatigue loading. For metal structures, fatigue is often a limiting factor and *can drive* the sizing/weight of the structure. Sizing consists of properties such as the layup (thickness for metals), overall shape/size of stiffeners, stiffener spacing, etc.

As opposed to metals, once a carbon/epoxy structure has been designed to be capable of the static load requirement, it is usually not fatigue critical. This is because carbon/epoxy laminates are resistant to fatigue damage. Additional discussions are presented in Chapters 2 and 24. Note that the comparisons shown in Figures 1.12 and 1.13 do not consider fatigue loading.

REFERENCES

1. Jones, R.M., *Mechanics of Composite Materials*, Second Edition, Taylor and Francis, Philadelphia, Pennsylvania, 1999.
2. ASM Handbook, Volume 21, *Composites*, 2001.
3. Baker, A., Dutton, S., and Kelly, D., *Composite Materials for Aircraft Structures*, Second Edition, AIAA, Reston, Virginia, 2004.
4. CMH-17-3G, *Composite Materials Handbook*, Volume 3, Chapter 5, 2012.
5. ASTM International, "ASTM D6507: Standard Practice for Fiber Reinforcement Orientation Codes for Composite Materials," March 2011.
6. Strong, A.B., *Fundamentals of Composites Manufacturing: Materials, Methods, and Applications*, Society of Manufacturing Engineers Publications Development Department, Dearborn, Michigan, 1989.
7. Daniel, I.M. and Ishai, O., *Engineering Mechanics of Composite Materials*, Second Edition, Oxford University Press, New York, New York, 2006.
8. CMH-17-3G, *Composite Materials Handbook*, Volume 3, Chapter 2, 2012.

Excerpt from *Practical Analysis of Aircraft Composites* Copyright © 2017 by Brian Esp

Excerpt from *Practical Analysis of Aircraft Composites* Copyright © 2017 by Brian Esp

2

Analysis Overview and Composites Versus Metals

2.1 INTRODUCTION

Chapter 1 provides general comparisons between composites and metals, including basic comparisons for strength, stiffness, and the area moment of inertia. This chapter highlights some of the most important *structural analysis* differences between carbon fiber/epoxy laminates and ductile metals. In order to do so, building block testing and the concept of a validated analysis method are initially presented. Detailed discussions regarding the analytical solutions for various topics are presented in their respective chapters.

Although not necessary, a background in the analysis of metal structures greatly reduces the learning curve for the analysis of composites. Some resources for the analysis of metal aircraft structures are provided elsewhere.[1–3]

2.2 ANALYSIS ACCURACY AND RISK OF FAILURE

For a given application (large aircraft, small aircraft, space structures, sporting goods, automobiles, etc.), the desired analysis accuracy and the risk of failure must be established. If weight is not critical, then a conservative approach can be taken, and parts can be heavier than necessary. Because of this, the analysis accuracy and fidelity can be relaxed. Similarly, if failure does not pose a substantial safety or cost risk, then the analysis approach may be relaxed. For a straightforward application, relatively simple formulas may be used, and structural testing may be the primary approach to achieving the desired structure. Also, for some applications, an unanticipated failure after the product is produced may be an acceptable risk. However, for other applications, the risk of unanticipated failure may not be acceptable.

For aircraft structures, where *weight is critical*, the required structural efficiency and analytical accuracy is usually high. This is especially true for large aircraft. In addition, because *safety is of critical importance*, the risk of failure must be very low. To achieve these demanding and competing requirements, a specific blend of analysis and testing for various levels of structural completeness is commonly used. This approach is especially important for composite structures.

2.3 BUILDING BLOCK TESTING

Building block testing, and the associated building block pyramid, consists of testing at various levels of structural completeness that may include: coupons, elements, details, sub-components, and components.[4–6] Lower-level tests establish basic material properties and specimens with single failure modes. Higher-level tests consist of complex structural arrangements. These test levels are discussed further in Chapter 28. A typical building block pyramid is shown in Figure 2.1. This figure demonstrates that many simple specimens are tested at the most basic levels, and fewer tests are performed for higher levels. Hence, this example of a building block resembles a pyramid. In general, there are various numbers of levels and the levels need not be tested in sequence. They may overlap and/or be performed in parallel.

In this chapter, the building block test levels are introduced to demonstrate how they can be used to develop a *validated analysis method*. The use of building block testing for *substantiation* is discussed in Chapter 28.

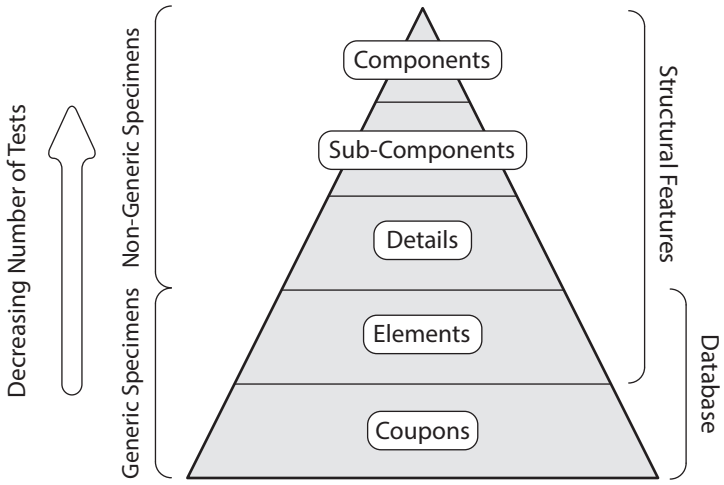

Figure 2.1 Example building block pyramid for aircraft structures.[5,6]

Excerpt from *Practical Analysis of Aircraft Composites* Copyright © 2017 by Brian Esp

Excerpt from *Practical Analysis of Aircraft Composites* Copyright © 2017 by Brian Esp

2.3.1 Advantages of Building Block Testing. Building block testing is typically used for both metal and composite structures and is widely used in the aircraft industry.[4] However, this approach is more important for composites because of the variety of failure modes, some of which may be complex and difficult to predict. Some of the advantages of building block testing are:

- Reduces both cost and risk. Valuable lessons can be learned from the relatively low cost of lower-level testing. This is especially true for "hot spots", where matrix sensitive failure modes can exist (See Chapter 8). This helps to prevent unanticipated failures for more complex 3D structures. Design concepts can be validated, and design flaws can be discovered early in the design process.
- Validated analysis methods can be developed (optional). To develop a validated analysis method, testing at various levels of structural completeness is required. This topic is discussed in further detail in Section 2.4.
- Building block testing can be used for substantiation of structures (See Chapter 28).

2.3.2 Analytical Solutions and Building Block Testing. Building block testing can be used in various ways. The test data may or may not be used in conjunction with an analytical solution to develop a *validated analysis method*. This key concept is discussed in Section 2.4. For smaller aircraft, simple structures, or secondary structures, it may not be efficient to develop validated analysis methods. For such a case, analytical methods may still be used for the design process, but they need not be validated. However, this carries the risk of unpredicted failure during the substantiation phase. In order to mitigate that risk, the structure may need to be overdesigned. Also, design flaws may not be discovered until late in the development process. Because of this and other reasons, large aircraft programs typically use validated analysis methods to substantiate the static strength requirements (See Chapter 28).

2.4 VALIDATED ANALYSIS METHODS

From an engineering perspective, the key concept of a *validated analysis method*, applicable to both metals and composites, must be discussed. A validated analysis method combines an analytical solution, in a specific manner, with building block testing. This approach is inherently *semi-empirical*. However, depending on the structure, the amount of required testing can vary considerably. The advantages

of using this approach are discussed later in this section. To develop a validated analysis method, the following aspects are considered:

- appropriate design domain (design space)
- analytical solution (captures the physical behavior of the problem with various degrees of accuracy)
- building block test data (various levels of completeness and complexity)

First, an analysis method must be restricted to an appropriate design domain (design space). That is, if the design deviates too far from the validated range of the analysis method, it is not applicable. Second, an analytical solution and building block test data are *combined* to produce the validated analysis method. This can be accomplished in *various ways*, with various amounts of testing and physical accuracy of the analytical solution. In general, with an increase in the physical accuracy of the analytical solution there is a decrease in the required amount of testing that supports the validated analysis method. Note that this also means a validated analysis method *need not* be physically accurate, physically consistent, or physically insightful, provided there is a sufficient test database to support the method. In fact, the method can even be a curve fit to empirical data, without the use of a physically based analytical solution. In general, the objective is to use analytical solutions *up to the point where they are useful* and to *compensate for any predictive shortcomings with test data*. This book presents analytical solutions that are commonly used with validated analysis methods.

At the lower levels of testing, statistically based allowables are developed (See Chapter 21). The initial analysis methods can be developed from the lower-level test data. Once higher-level testing is available, these methods are predicted, verified, and modified if necessary. At this stage, *design values* are used, which are correlated to a validated analysis method (See Figure 2.2). Design values account for various empirical correction factors, knockdown/fitting factors, cutoffs, etc., and are further discussed in Chapter 21. The objective of the analysis method is to expand the useful design space compared to the available test data. For example, many load cases can be addressed via analysis, which would otherwise be impractical and/or prohibitively expensive to address via testing alone. In essence, the validated analysis method is an analytical solution that is "calibrated" via testing.

To determine the static load capability (static strength) of metal structures, basic material properties and classical analytical solutions can often be combined to provide good agreement to experimental data. Therefore, the analytical solutions for metals, as presented in academia, tend to directly carry over to engineering analysis methods. In turn, a relatively low amount of testing is required to accurately predict the response of more complex structures (See Figure 2.2). However, this

Excerpt from *Practical Analysis of Aircraft Composites* Copyright © 2017 by Brian Esp

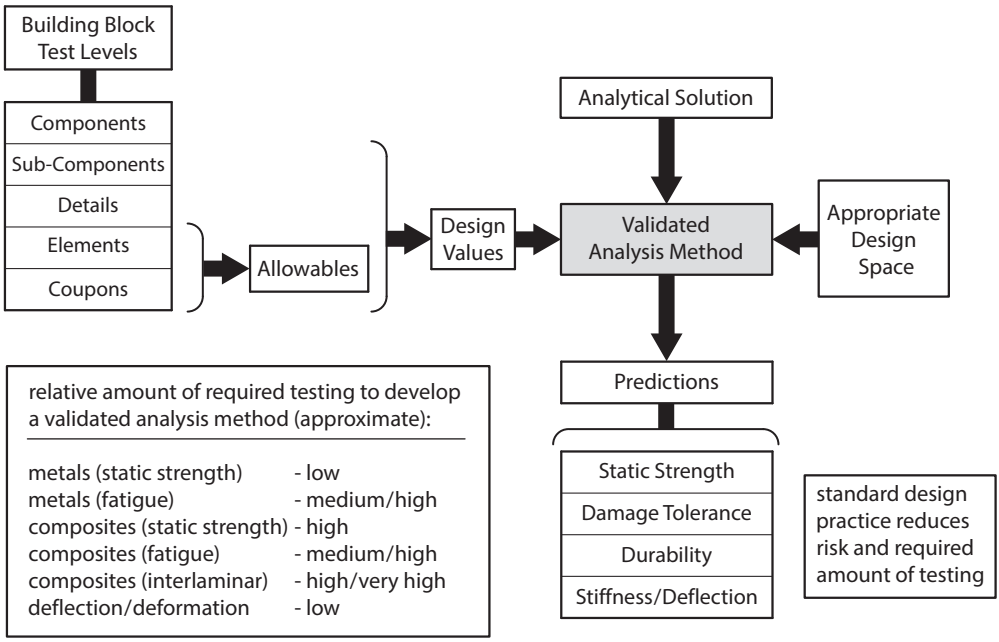

Figure 2.2 Example of how a validated analysis method is developed through the use of building block testing. Variations to the presented flowchart also exist.

has historically *not been the case* for composite materials and has caused a great amount of misunderstanding (i.e., academic solutions do not directly translate to engineering solutions). Because of the many failure mechanisms that exist for composite laminates (from microscopic to macroscopic levels), validated composite analysis methods generally require significantly more testing than metals (See Figure 2.2). This is because no amount of analysis, *regardless of the fidelity*, can account for all failure mechanisms. In turn, many composite analysis methods are semi-empirical that are supported by a successful history of use.

Each failure mode has its own characteristics and associated analysis approach. Failure modes with well-established analytical solutions require a minimal amount of testing, while failure modes that are complex and less predictable require greater amounts of testing for validation. In general, less test data is required for problems that are driven by deflection or stiffness (such as elastic stability) than for strength prediction.

Standard design practice should be used to minimize the required amount of testing and to reduce the risk of unpredicted failures. An increase in the complexity/fidelity of the analytical solution *should not be used to compensate* for

Excerpt from *Practical Analysis of Aircraft Composites* Copyright © 2017 by Brian Esp

poor design practices. Also, some failure modes are inherently less predictable than others, which should be accounted for in the design process.

The engineer should recognize that the typical objective of academia and some research is to focus on the actual physical behaviors and to develop corresponding analytical predictions; these pure approaches only require the most basic material properties. While this is a noble objective, it is not always a suitable engineering approach. This is especially true when analyzing composites.

2.4.1 Advantages of Validated Analysis Methods. Large aircraft typically use building block test data to develop validated analysis methods. The advantages of using a validated analysis method are:

1. For large programs, the program risk and cost are usually reduced.
2. Structures can be substantiated by analysis supported by test evidence, which has a *variety of significant advantages* (See Chapter 28). Substantiation by analysis is the typical approach once validated analysis methods are developed.
3. Analysis methods are validated for accuracy. This allows the structure to be designed in an optimal manner.
4. A database of the material allowables and design values is established. This database can be used for derivative aircrafts and subsequent programs.
5. Failure modes can be correlated to analysis models to enhance general predictably. This improves the understanding of the failure mechanisms and reduces the risk of unpredicted failures.
6. Parametric studies and design trades can be made.
7. Repairs, design changes, and derivative aircrafts can be evaluated with relative ease.

2.5 PRELIMINARY ANALYSIS

Even if a validated analysis method is used for final analysis, preliminary analysis (not validated via the full building block test data) is usually performed first. Preliminary analysis allows the engineer to make predictions during the early phase of the program, even though the complete set of test data is not available. At this stage, only the lowest-level test data may be available, which may be lacking statistical significance.

Excerpt from *Practical Analysis of Aircraft Composites* Copyright © 2017 by Brian Esp

2.6 LOADS

2.6.1 Single Load Path. Single load path structures are statically determinate. Therefore, the *overall* internal loads are *not a function* of the structure's material. Figure 2.3 shows the overall moment and shear diagrams for a cantilever beam, which is the same for metal or composite structures.

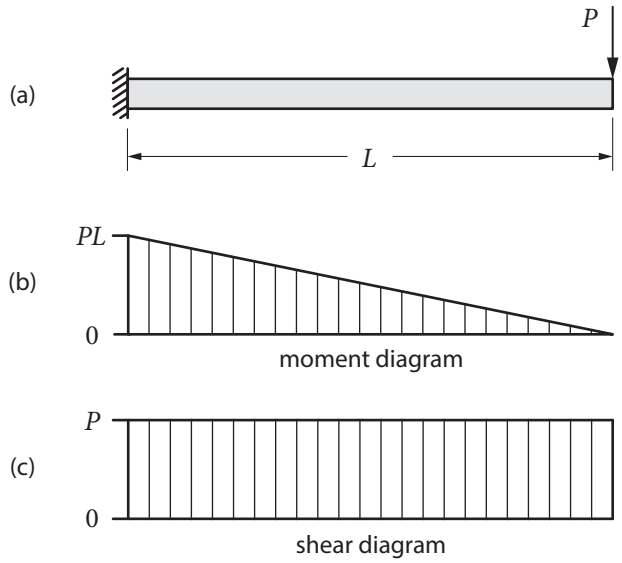

Figure 2.3 Moment and shear diagrams for a cantilever beam: (a) cantilever beam; (b) moment diagram; (c) shear diagram.

2.6.2 Composite Structural Members. A composite structural member can have varying elastic properties *within the same structural member.* Consider the simple cross section shown in Figure 2.4. Elements 1 and 2 have different elastic properties in the z-direction. For a z-direction load, the deflection of each element is as follows: P_i is the load in each element, k_i is the axial stiffness of each element, δ_i is the deflection of each element, and L is the length in the z-direction.

$$P_1 = k_1\delta_1 \qquad k_1 = \frac{A_1E_1}{L}$$
$$P_2 = k_2\delta_2 \qquad k_2 = \frac{A_2E_2}{L} \tag{2.1}$$

Excerpt from *Practical Analysis of Aircraft Composites* Copyright © 2017 by Brian Esp

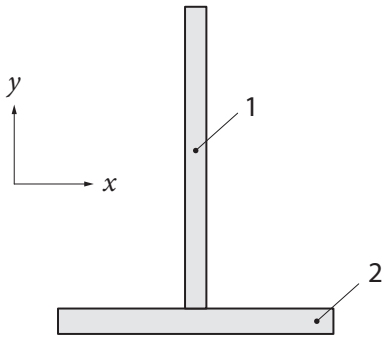

Figure 2.4 Cross section that has elements with different elastic properties.

If *strain compatibility* is enforced (all elements have the same total deflection, $\delta_1 = \delta_2$), the following relationships exist: P is the total axial load applied to the cross section at the neutral axis, A_i is the area of each element, and E_i is the elastic modulus of each element. For a composite laminate, an effective axial modulus can be used (See Chapter 5):

$$\frac{P_1}{A_1 E_1} = \frac{P_2}{A_2 E_2} \qquad P = P_1 + P_2 \tag{2.2}$$

When the elastic properties are different for elements 1 and 2, the load in each element is:

$$P_1 = P\frac{A_1 E_1}{A_1 E_1 + A_2 E_2} \qquad P_2 = P\frac{A_2 E_2}{A_1 E_1 + A_2 E_2} \tag{2.3}$$

Equation 2.3 demonstrates that the load in each element is a *function* of the element's stiffness (general composite). If elements 1 and 2 have the *same* elastic properties, which is typical for a metal structure, then the simplified solution is as follows (A_T is the total area of the cross section):

$$P_1 = P\frac{A_1}{A_T} \qquad P_2 = P\frac{A_2}{A_T} \tag{2.4}$$

Excerpt from *Practical Analysis of Aircraft Composites* Copyright © 2017 by Brian Esp

2.6.3 General Structures. A large percentage of aircraft structures consist of redundant structural members (See Figure 2.5). Because there are multiple load paths, the stiffness of each member determines the amount of load it carries. For large aircrafts, finite element models are often used to determine the *loads* in each structural member. Using the loads, a "detail" analysis, as discussed in Chapter 23, can then be performed.

Note that the skin and stringer may have *different* effective moduli, even if the same composite material system is used. For example, since the stringers are predominately loaded along their longitudinal axes, the percentage of fibers may be biased in that direction. The skin may have a more general state of loading, and the preferred layup may be closer to a quasi-isotropic laminate (See Chapters 4 and 22). The different elastic properties affect the load distribution among the structural members.

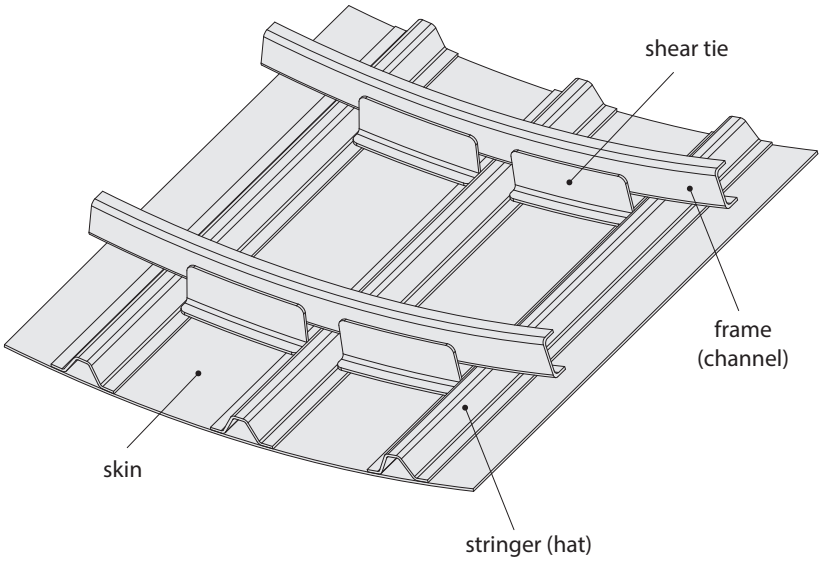

Figure 2.5 Portion of aircraft structure.

2.7 LOAD REDISTRIBUTION

As discussed in Chapter 1, ductile metals are forgiving materials that usually allow for redistribution of loads via yielding (and associated large deformation) before fracture. Localized failures may be arrested by the surrounding redundant structural members. Composite materials exhibit less deformation before fracture (limited yield-like behavior). In turn, they are less forgiving in the presence of design, analysis, and manufacturing mistakes. Therefore, personnel who work with composites must have the appropriate skill sets.

Excerpt from *Practical Analysis of Aircraft Composites* Copyright © 2017 by Brian Esp

2.8 ELASTICITY

When loaded, a material deforms. Elasticity is the ability of the material to resume its original shape after the load is removed. The elastic properties of metals do not vary significantly with orientation and are typically considered to be elastically isotropic (or nearly so). Composites may have significantly varying elastic properties in each orientation (See Chapters 3 and 4). A laminate's elastic properties are a function of the orientation of the individual plies (laminae) in the laminate. The laminate stacking sequence (LSS) affects the bending stiffness properties of a laminate. A phenomenon that does not occur in metals is that certain laminates exhibit coupling between extension, shear, twist, and bending (See Chapter 4).

Elasticity of metals is represented by straightforward mathematical expressions. Elasticity of composites, on the other hand, is represented by more complex expressions. A computer program is typically used to determine the laminate's load-deformation characteristics. Classical Laminate Theory (CLT), discussed in Chapter 4, is used to represent the elastic properties of a laminate via the $[A]$, $[B]$, and $[D]$ matrices.

2.9 STATIC STRENGTH (IN-PLANE)

For in-plane loading of unnotched laminates (pristine condition), the ultimate static strength represents the stress level, based on the average through-the-thickness stress at which a material will fracture (for a slowly applied load). Strength of metals is usually similar, but not usually the same, in all directions. The strength of a laminate is a function of the orientation of plies within the laminate. Because of this, strength can vary significantly with a change of the layup.

2.9.1 Unnotched Strength. An *unnotched laminate* is considered to be a pristine laminate that does not have holes, cracks, impact damage, etc. To determine the unnotched strength, many failure criteria have been postulated, but none are universally accepted. This is due to the various complex failure mechanisms, and other factors, that composites exhibit. Conversely, failure criteria for metals are analytically simpler to apply and have a long history of successful use. Though there is not a universally accepted failure criterion for composites, proposed failure criteria are more appropriate for unnotched laminates than for notched laminates (See Chapters 9 and 10).

Excerpt from *Practical Analysis of Aircraft Composites* Copyright © 2017 by Brian Esp

2.9.2 Small Notch Strength. The term *notched strength* represents the apparent strength of a composite with a through-the-thickness discontinuity, such as a hole or crack. Notched strength is based on the remote load and not the local stresses near the discontinuity. This section considers notches that are "small" (small notch strength is discussed further in Chapter 10). For a ductile metal part with a circular hole, the static ultimate load capability is not sensitive to the effect of local stress concentrations. This is because the ductility allows the local stress concentration to yield without fracture (See also Chapter 1). However, composites are sensitive to the local regions of high stress around the edge of the hole. For this reason, composite structures are often limited by the effects of notch sensitivity for practical applications.

The term *notched strength ratio* (NSR) is defined to be the ratio of the ultimate strength with a notch and without a notch, and is based on the applied remote stress. Because the NSR is based on the remote stress, it also represents ratio of the ultimate load capability (with and without a notch). Figure 2.6 shows that for the ultimate load capability, a ductile material is as capable as its net section (linear response). However, in the presence of a hole, the brittle material has a dramatic reduction of the load capability, even for small D/w ratios. Multi-directional composite laminates are *neither brittle nor ductile*. Rather, they lie somewhere in between (pseudo-plastic behavior at the stress concentration). The NSR is a function of many variables, as discussed in Chapter 10.

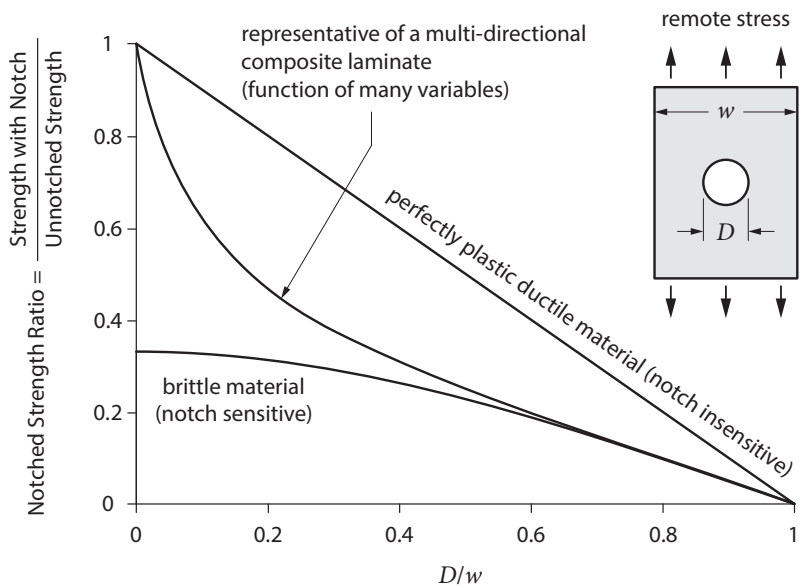

Figure 2.6 Notched strength ratio (NSR) for brittle, ductile, and multi-directional composite laminates. For reference only. The actual response of a laminate is a function of many variables. The NSR is based on the applied remote stress.

Excerpt from *Practical Analysis of Aircraft Composites* Copyright © 2017 by Brian Esp

2.10 INTERLAMINAR STRENGTH

For a laminated composite, the interlaminar normal strength, or through-the-thickness (z-direction) strength, is relatively poor. This is because there are no fibers oriented in the z-direction. Similarly, the interlaminar shear strength is relatively low. Interlaminar stresses can cause delamination and an associated reduction of the structure's load capability and stiffness. Conversely, most metals are nearly isotropic (the z-direction strength of sheets/plates is not dramatically different than the in-plane strength) and cannot delaminate.

There are several scenarios where interlaminar stresses are significant. These scenarios are discussed in Chapter 8. While interlaminar stresses cannot be eliminated, they can be managed via proper design practice. Interlaminar failure modes are relatively difficult to predict via purely analytical solutions. Designs that are driven by interlaminar failure are predominately validated via building block testing (See Chapters 8, 13, and 28).

2.11 MECHANICALLY FASTENED JOINTS

For the static ultimate load capability, metal joints with mechanical fasteners are often designed for the bearing failure mode to be critical. For multi-row joints, this allows the fastener loads to be evenly distributed among the fastener rows. This occurs because of hole elongation and other factors. Composite laminates, on the other hand, may exhibit a limited amount of bearing hole deformation. In turn, the fastener rows are not assumed to have a uniform load distribution. For the linear solution, equilibrium and stiffness equations are combined to determine the distribution of fastener loads within the joint (See Chapter 11). This approach is similar to that of the *linear* response of metal joints, which is used for metal fatigue analysis. For composites, nonlinear analysis can sometimes demonstrate a more uniform fastener load distribution, provided bearing failure occurs before a bearing-bypass failure (presented in the following paragraph). In general, because of the limited redistribution of fastener loads, composite joints are less forgiving than metal joints.

For a tension load, an example detail element with a bearing load and a net bypass load is shown in Figure 2.7 (See Chapter 11 for a detailed discussion). The static ultimate load capability of a bolted ductile metal joint is not highly sensitive to the stress concentration that exists at the fastener location. Therefore, the bearing failure mode and the net section tension failure mode are considered to be *independent*. For a composite laminate, the failure that causes complete separation is driven by the *combined stress concentration* from the bearing load and

Excerpt from *Practical Analysis of Aircraft Composites* Copyright © 2017 by Brian Esp

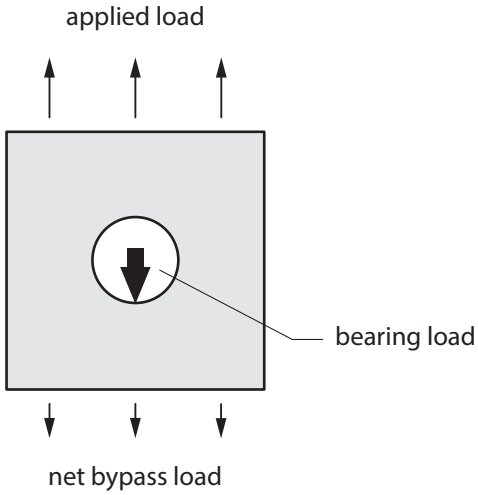

Figure 2.7 Example detail element for a tension loading condition.

the net bypass load. This *interactive* failure mode is known as a "bearing-bypass" interaction (See Chapter 11). An independent bearing failure is also possible for composites.

The static ultimate capability of metal joints can be determined with relatively straightforward analytical solutions and basic material properties. For composites, special mechanical properties must be determined to predict the bearing-bypass mode (See Chapters 11 and 21). The mechanical properties account for the effects of notch sensitivity, bearing-bypass ratio, installation torque, hole fit, and other factors. Semi-empirical analysis methods are the typical practical approach. Solutions that use a pure physics-based approach are not well accepted (See Chapters 10 and 11).

For composite laminates, special attention to fastener failure is warranted. This is partially because of the low transverse shear stiffness of the laminate, which allows the fastener to bend more than for a metal joint. Also, composite joints are usually thicker than their metal counterparts, which can exaggerate the detrimental effects related to fastener bending and fastener fatigue. Composite laminates also have lower pull-through strengths than metals. This failure mode also requires special attention.

Excerpt from *Practical Analysis of Aircraft Composites* Copyright © 2017 by Brian Esp

2.12 BONDED JOINTS

The primary analytical consideration for bonded metal joints considers the *bondline*. More specifically, the shear stresses in the bondline can be evaluated analytically. However, the analytical evaluation of the effect of peel stresses is not well established. Therefore, joints are often designed to minimize the peel stresses.

For composites, the bondline can be evaluated in a similar manner as for metal joints. However, composites joints must also consider the interlaminar failure mode (See Figure 2.8). An interlaminar failure mode is often the critical mode for bonded composite joints because an epoxy matrix is usually weaker and less tough than a high performance epoxy film adhesive. There are various analytical and empirical approaches that address this failure mode (See Chapter 13). While stress analysis solutions are primarily semi-empirical, interlaminar fracture mechanics (ILFM) solutions are physically consistent with the mechanics of interlaminar failure.

For metal skin-stiffener joints, the stiffeners may be mechanically fastened to the skin. In the event that the skin post-buckles, the out-of-plane loads can be reacted by the fasteners. Conversely, composite skin-stiffener joints may be bonded. In the event that the skin post-buckles, large interlaminar stresses can develop at the skin/stiffener interface. This can cause an initial delamination and delamination growth. See Chapter 13 for further discussion.

Figure 2.8 Interlaminar failure for a bonded composite joint.

2.13 BEAMS

For a homogeneous metal beam, the flanges and webs have the same elastic properties. Therefore, the stresses and deflection can be determined in a straightforward manner. By contrast, the flanges and webs of a composite beam can have different elastic properties. In turn, for a general composite cross section, the axial stiffness and flexural rigidity must initially be determined. Using these properties, the strain/stress and deflection can then be determined for the flanges and webs (See Chapter 16).

Excerpt from *Practical Analysis of Aircraft Composites* Copyright © 2017 by Brian Esp

2.14 STABILITY

The solutions for stability analysis of laminates can be significantly different from those for metals. For laminates, the mathematical expressions for the elastic stability of plates are more complex than for isotropic materials. This is partially due to the additional elastic properties that define a general laminate. See Chapter 17 for further discussion.

The bending stiffness of an isotropic plate (metal) is a function of its thickness. The bending stiffness of a laminate depends on the laminate stacking sequence (LSS). For example, a laminate with the 0° fibers at the outer surfaces will have different bending stiffness properties than if the 0° fibers are moved toward the midsurface (same thickness laminate). In turn, the buckling load capability, a function of the bending stiffness, will also be a function of the stacking sequence.

Composites laminates exhibit relatively low transverse shear stiffness compared to metals (See Chapter 17). Transverse shear stiffness is dominated by the relatively soft matrix in solid laminates. For this reason, special consideration must be given to the stability of thick solid laminates. This effect also occurs for sandwich structures because the transverse shear stiffness of the core is relatively low (relevant to both metal and composite material sandwich structures).

Column solutions are similar to those used for metals. The common Johnson-Euler solution is often used for both types of materials. Via semi-empirical solutions, crippling of metals is well established. However, this is not the case for composite laminates. Instead, conservative solutions, based on elastic stability, may be considered. However, similar to metals, composites do exhibit crippling behavior. Provided there is sufficient test data to support the analysis method, this can be taken advantage of.

2.15 SANDWICH STRUCTURES

The analytical methods for metal sandwich structures are similar to the methods for composite sandwich structures (See Chapter 18). For both cases, the core is relatively soft, and the transverse shear stiffness should be accounted for. Unlike metal sandwich structures, general composite sandwich structures have elastic properties that vary with the orientation of the sandwich. Also, for a ramped closeout of a composite structure, the effects from interlaminar stresses must be considered. Also, durability of sandwich structures with thin composite facesheets is a major concern (See Chapter 27).

Excerpt from *Practical Analysis of Aircraft Composites* Copyright © 2017 by Brian Esp

2.16 LARGE CUTS

For large cuts in metal structures, linear elastic fracture mechanics (LEFM) may be used. However, LEFM has not been found to be as accurate for composite structures. Instead, alternative approaches may be considered (See Chapter 19). For both metals and composites, severe damage is sometimes simulated by large cuts.

2.17 POST-IMPACT STRENGTH

For composites, a significant reduction of capability can occur after an impact, even if there is little or no visible damage (non-penetrative damage). This is because the plies may delaminate and the residual compression/shear strengths can be dramatically reduced (See Chapter 20). Conversely, metals do not have a significant reduction of strength after an impact that does not penetrate the structure. To determine the post-impact strength of composites, testing is usually the primary approach. This is because analytical methods are usually insufficient to characterize the extent of damage and to predict residual strength. Chapter 20 further discusses the strength of composites with non-penetrative damage.

2.18 MECHANICAL PROPERTIES

Composites and metals are characterized by different mechanical properties. Simple and effective failure criteria exist for metals, but there are no universally agreed upon failure criteria for composites. To offset the lack of an adequate generalized failure criterion, additional laminate-level testing is performed.

Typical properties for the static loading of *metals* are as follows. These properties are not significantly affected by the typical temperature range for aircraft structures (See also Section 2.19 and Chapter 21).

E = tensile modulus

E_c = compressive modulus

G = shear modulus

ν = Poisson's ratio (or μ)

Excerpt from *Practical Analysis of Aircraft Composites* Copyright © 2017 by Brian Esp

F_{tu} = ultimate tensile strength

F_{ty} = yield tensile strength

F_{cy} = yield compressive strength

F_{su} = ultimate shear strength

F_{bru} = ultimate bearing strength

F_{bry} = yield bearing strength

Typical properties for a *composite ply* are the following. These properties are significnatly influenced by the temperature and moisture environments (See Chapter 21). The elastic properties are also a function of the loading direction (tension or compression), but to a lesser degree than strength properties (See Chapter 21).

E_1 = elastic modulus, longitudinal direction

E_2 = elastic modulus, transverse direction

ν_{12} = major Poisson's ratio

G_{12} = shear modulus in the 1-2 plane (in-plane)

F_1^{tu} = ultimate tensile strength, longitudinal direction

F_2^{tu} = ultimate tensile strength, transverse direction

F_1^{cu} = compressive strength, longitudinal direction

F_2^{cu} = compressive strength, transverse direction

F_{12} = in-plane shear strength

e_1^{tu} = tensile strain allowable, longitudinal direction

e_2^{tu} = tensile strain allowable, transverse direction

e_1^{cu} = compressive strain allowable, longitudinal direction

e_2^{cu} = compressive strain allowable, transverse direction

e_{12} = in-plane shear strain allowable

Excerpt from *Practical Analysis of Aircraft Composites* Copyright © 2017 by Brian Esp

In addition, *apparent laminate-level* properties must be determined. This is because the ply properties, coupled with a failure criterion, are not sufficient to accurately predict the laminate-level strength. This is especially true for laminates with a hole or a fastener (See Chapters 10 and 11). The basic laminate-level properties are (See Chapter 21):

F_{UNT} = unnotched tension strength
F_{UNC} = unnotched compression strength
F_{OHT} = open hole tension strength
F_{OHC} = open hole compression strength
F_{FHT} = filled hole tension strength
F_{FHC} = filled hole compression strength

e_{UNT} = unnotched tension strain allowable
e_{UNC} = unnotched compression strain allowable
e_{OHT} = open hole tension strain allowable
e_{OHC} = open hole compression strain allowable
e_{FHT} = filled hole tension strain allowable
e_{FHC} = filled hole compression strain allowable

F_{br} = bearing strength

Also, composite specific tests are required to determine the capability of parts with significant interlaminar stresses (See Chapters 8, 13, and 21). The post-impact strength is also a property that is unique to composites (See Chapters 19 and 21).

2.19 ENVIRONMENTAL EFFECTS

For the typical subsonic aircraft environment, metal properties are not significantly affected by temperature and moisture (discounting local heat sources). However, metals may be susceptible to long-term effects of moisture (corrosion). Stress-corrosion cracking, which occurs when a metal structure is fatigue loaded in a corrosive environment, is of concern.

The static strength of a composite laminate is relatively sensitive to the immediate effects of temperature and moisture ingression (See Chapter 21). The elastic properties are also affected, though usually to a lesser degree. The sensitivity of the *matrix* (often an epoxy) to extreme temperature/moisture environments is the primary reason for reduced composite properties. Laminate properties that are highly influenced by the matrix, such as interlaminar properties, are most affected by extreme environments (See Chapter 21).

Excerpt from *Practical Analysis of Aircraft Composites* Copyright © 2017 by Brian Esp

2.20 FATIGUE LOADING

This section compares fatigue of metals to fatigue of composites. A more complete discussion regarding fatigue of composites, and additional comparisons between metals and composites, is provided in Chapter 24.

For metals, fatigue-related requirements often drive sizing (geometric properties such as thickness and overall shape/size). Conversely, carbon fiber composites for many aircraft structures are not usually sized by fatigue requirements. For well-designed carbon fiber structures, significant fatigue damage does not usually occur for fixed wing aircraft (See Chapter 24). However, glass fibers and aramid fibers are not as resistant to fatigue loading as carbon fibers.

2.20.1 Metals. For ductile metals, stress concentrations do not significantly affect the static ultimate load capability (See Chapter 1). However, when fatigue loaded, microscopic damage can occur at stress concentrations (door and window cutouts, open holes, fastener hole locations, internal radii, etc.). After a sufficient number of fatigue cycles, this microscopic damage can eventually develop into an initial *through-the-thickness* crack (See Figure 2.9). Metals are sensitive to fatigue damage when the local stresses are tensile-tensile (result of tension-tension loading for simple parts/specimens) and tensile-compressive stresses, but are not sensitive to compressive-compressive stresses.

For metal fatigue, analytical solutions are relatively well established. This is the case for both crack initiation and crack propagation. For crack initiation, the stress-life approach may be used for large cycle fatigue, and the strain-life

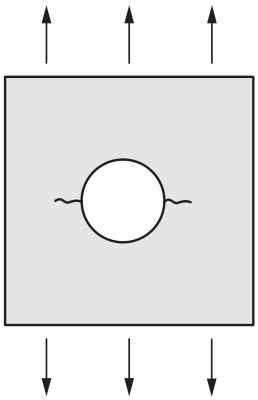

Figure 2.9 Through-the-thickness cracks in a metal part. The cracks typically originate at stress concentrations and may propagate when additional fatigue loads are applied.

Excerpt from *Practical Analysis of Aircraft Composites* Copyright © 2017 by Brian Esp

approach may be used for short cycle fatigue. Miner's rule and modified forms of Miner's rule are appropriate for the crack initiation stage.

For many metals, once a through-the-thickness crack has initiated, then predictable and stable crack growth (crack propagation) will occur upon further fatigue loading. However, this is not true for some high strength steels (See Chapter 26). For metals that do exhibit stable crack growth, linear elastic fracture mechanics (LEFM) can be used to predict the growth rate. The residual strength, as a function of crack length, is also predictable via LEFM. Metals also exhibit crack growth retardation due to crack tip overloads (composites do not exhibit this phenomenon). LEFM can be used to determine the number of cycles before a crack reaches a critical length.

2.20.2 Composites. For composites, damage that initiates from fatigue loading is very different from metals. As opposed to the formation of a well-defined through-the-thickness crack, general degradation of the fiber and matrix occur in the form of matrix cracking, delamination, fiber breakage, and interfacial disbonding. Unlike metals, there are no well-established analytical methods to address generalized fatigue of composites (See also Chapter 24).

For in-plane loading of laminates (load is reacted primarily by the fibers), carbon fiber composites exhibit better fatigue performance for open holes and fastener hole locations than metals; in general, the *S-N* curve is flatter for composites. For fastened joints used for fixed wing aircraft, carbon fiber laminates are not usually fatigue critical (See Chapter 24). However, fatigue of the metal fastener may be critical if the fastener loads are relatively high (See Chapters 11 and 24). Compared to metals, the *threshold* for fatigue damage growth is larger for composites. However, once the threshold has been exceeded for composites, the growth is *rapid*. Conversely, the growth rate for metals is not as rapid and is relatively stable.

Fatigue of composites is often concerned with loading that causes significant *interlaminar stresses* (See Chapter 24). For example, after an impact a laminate may delaminate. Delamination growth may occur when the sublaminate(s) buckle. This can occur when the damaged laminate is loaded in compression or shear, but does not occur when loaded in tension.

Excerpt from *Practical Analysis of Aircraft Composites* Copyright © 2017 by Brian Esp

2.21 DAMAGE TOLERANCE

This section compares damage tolerance (DT) for metals to DT for composites. A more complete discussion regarding damage tolerance for composites is provided in Chapter 26.

2.21.1 Metals. For metal structures, the primary damage tolerance concern is the presence of through-the-thickness cracks that grow and coalesce, reducing the structure's residual strength and stiffness. Cracks may initiate at locations with stress concentrations because of fatigue loading. They may also occur from undetected flaws, accidental damage, or corrosion. These cracks may grow under cyclic loading that causes the crack to open (tensile crack tip stresses). This predominately occurs from tension loading and/or out-of-plane bending. Metal alloys are susceptible to corrosion, which can exaggerate crack growth (stress-corrosion cracking). Multiple site damage (MSD) is of concern because cracks can link up and become a single large crack. Linear elastic fracture mechanics (LEFM) is a well-established method to predict stable crack growth and the residual strength for metals. Stress intensity factors, fracture toughness, and crack propagation growth rates are used in the analysis.

While a detailed visual inspection method is often part of the damage tolerance approach, small cracks underneath fastener heads/tails are not visible when the fastener is installed. Therefore, other inspection methods are more appropriate for small cracks at fastener locations (such as eddy current testing). The rate of damage growth determines the frequency/type of inspections. In other words, the approach is *deterministic*.

In order to contain damage that occurs from crack growth, the size of a metal part may be limited. This prevents continued crack growth and is part of a damage tolerance strategy. For composites, relatively large parts are possible. This is because damage *propagation* does not typically occur (See Chapter 24).

2.21.2 Composites. For composites, the primary damage tolerance concern is from accidental damage. Impacts may penetrate a laminate, reducing the structure's capability. Even if a laminate is not penetrated, the capability may be significantly (and *immediately*) reduced because of delaminations, matrix damage, fiber damage, and fiber/matrix disbonding. For sandwich structures, additional damage mechanisms are facesheet-to-core disbonding, core crushing and/or core fracture, and moisture/fluid ingression.

In general, damage tolerance of composites focuses on the residual strength in the presence of various degrees of damage (See Chapter 26). Damage growth is usually less of a concern, and a "no-growth" approach is frequently used (although a slow-growth approach is also possible). Conversely, damage tolerance for metals usually allows for stable and predictable crack growth, where the residual strength *slowly* declines (See also Chapter 24).

Excerpt from *Practical Analysis of Aircraft Composites* Copyright © 2017 by Brian Esp

2.22 STRUCTURAL SIZING

In general, there are a variety of load cases, environments, failure modes, etc., to consider for aircraft structures (both metals and composites). Each structural member has its own unique requirements and conditions that drive the sizing. Sizing consists of properties such as the layup (thickness for metals), overall shape/size of stiffeners, stiffener spacing, etc. This section considers some *trends* for sizing drivers for metals and composites. However, these trends may not be applicable to all structures. See Chapter 23 for additional discussion.

2.22.1 Metals. The sizing drivers for metals may be related to the static load conditions (ultimate load capability and residual strength capability after cracking/damage) or fatigue-related requirements. For example, the tensile fatigue-related stresses for the upper wing skin are relatively small. Therefore, the static ultimate load requirement usually drives the sizing. Because of this, a high static strength alloy, such as a 7000 series aluminum, is often used. For the lower wing skin, the tensile fatigue-related stresses are relatively large. Therefore, fatigue-related requirements often drive the sizing (as opposed to the static load conditions). For this case, a material with superior crack growth properties is usually preferable to a material with a higher static strength. Because of this, a 2000 series aluminum alloy is often used for the lower skin. However, note that some modern 7000 series aluminum alloys have excellent crack growth properties as well. In general, many metal structures and structural details are sized by fatigue-related requirements related to durability and damage tolerance.

2.22.2 Composites. The sizing drivers for composites are often related to static load conditions (ultimate load and residual strength after damage). These requirements are discussed in Chapters 24–27 and an overview is provided in Chapter 23. Composites are generally resistant to damage due to fatigue loading. To meet the static strength requirements, civil aircraft structures are assumed to have damage that is not detectable, which may drive sizing. For composites, the most damaging case (for undetectable damage) is typically from barely visible impact damage (BVID). Also, structures are usually designed to allow for a repair with mechanical fasteners, which may affect sizing (See Chapter 22). Durability considerations may also affect the minimum thickness of structures, especially for the facesheets of a sandwich structure. In all these cases, the structural capability is far less than the unnotched capability. In other words, aircraft structures must consider a variety of effects that significantly reduce the capability compared to that of a pristine structure.

Excerpt from *Practical Analysis of Aircraft Composites* Copyright © 2017 by Brian Esp

REFERENCES

1. Bruhn, E.F., *Analysis and Design of Flight Vehicle Structures*, Jacobs Publishing, Carmel, Indiana, 1973.
2. Flabel, Jean-Claude, *Practical Stress Analysis for Design Engineers*, Second Edition, Lake City Publishing, Hayden Lake, Idaho, 1997.
3. Niu, M., *Airframe Analysis and Sizing*, Second Edition, Hong Kong Conmilit Press, Hong Kong, 1997.
4. CMH-17-3G, *Composite Materials Handbook*, Volume 3, Chapter 4, 2012.
5. Federal Aviation Administration, Composite Aircraft Structure, Advisory Circular AC No: 20−107B, August 2009.
6. Fields, R.E., "Overview of Testing and Certification," ASM Handbook, Volume 21, *Composites*, 2001.

Excerpt from *Practical Analysis of Aircraft Composites* Copyright © 2017 by Brian Esp

Excerpt from *Practical Analysis of Aircraft Composites* Copyright © 2017 by Brian Esp

Part 2

Requirements and Substantiation

Part 2 (Chapters 24–28) discusses the following aspects of composite aircraft structures:

- fatigue loading and associated empirical approaches (as opposed to analytical approaches)
- structural requirements related to safety (static strength and damage tolerance)
- durability objectives (and also the design of sandwich structures)
- structural substantiation

Some of these topics are involved and have subtle aspects to them; the information provided in Part 2 is not meant to be exhaustive. Composites have not reached the same level of maturity as metals, and so the requirements and substantiation approaches are various and still evolving. The focus is primarily on civil aircraft; this is because of the relative maturity and public availability of the relevant documents.

Excerpt from *Practical Analysis of Aircraft Composites* Copyright © 2017 by Brian Esp

Index

A

B

Excerpt from *Practical Analysis of Aircraft Composites* Copyright © 2017 by Brian Esp

Excerpt from *Practical Analysis of Aircraft Composites* Copyright © 2017 by Brian Esp

Excerpt from *Practical Analysis of Aircraft Composites* Copyright © 2017 by Brian Esp

Excerpt from *Practical Analysis of Aircraft Composites* Copyright © 2017 by Brian Esp

Excerpt from *Practical Analysis of Aircraft Composites* Copyright © 2017 by Brian Esp

D

Excerpt from *Practical Analysis of Aircraft Composites* Copyright © 2017 by Brian Esp

E

Excerpt from *Practical Analysis of Aircraft Composites* Copyright © 2017 by Brian Esp

F

Excerpt from *Practical Analysis of Aircraft Composites* Copyright © 2017 by Brian Esp

Excerpt from *Practical Analysis of Aircraft Composites* Copyright © 2017 by Brian Esp

Excerpt from *Practical Analysis of Aircraft Composites* Copyright © 2017 by Brian Esp

G

H

I

Excerpt from *Practical Analysis of Aircraft Composites* Copyright © 2017 by Brian Esp

J

K

L

Excerpt from *Practical Analysis of Aircraft Composites* Copyright © 2017 by Brian Esp

M

Excerpt from *Practical Analysis of Aircraft Composites* Copyright © 2017 by Brian Esp

Excerpt from *Practical Analysis of Aircraft Composites* Copyright © 2017 by Brian Esp

N

O

Excerpt from *Practical Analysis of Aircraft Composites* Copyright © 2017 by Brian Esp

P

Excerpt from *Practical Analysis of Aircraft Composites* Copyright © 2017 by Brian Esp

Q

R

Excerpt from *Practical Analysis of Aircraft Composites* Copyright © 2017 by Brian Esp

S

Excerpt from *Practical Analysis of Aircraft Composites* Copyright © 2017 by Brian Esp

Excerpt from *Practical Analysis of Aircraft Composites* Copyright © 2017 by Brian Esp

Excerpt from *Practical Analysis of Aircraft Composites* Copyright © 2017 by Brian Esp

T

Excerpt from *Practical Analysis of Aircraft Composites* Copyright © 2017 by Brian Esp

Excerpt from *Practical Analysis of Aircraft Composites* Copyright © 2017 by Brian Esp

U

V

Excerpt from *Practical Analysis of Aircraft Composites* Copyright © 2017 by Brian Esp

W

X

Y

Z

Excerpt from *Practical Analysis of Aircraft Composites* Copyright © 2017 by Brian Esp